42CE

Fan Coil Unit

Air Volume: 340~2700m³/h

ISO14001 ISO9001

Carrier Air Conditioning Sales & Service (Shanghai) Co.,Ltd.

Content

• Model Number Nomenclature	1	• Selection Procedure	28
• Product Features	2	• Dimensions	
• Technical Parameter	3	• Fan Performance	32
• Performance Data	5	• Wiring Diagram	33
• Noise Testing	27	• Installation & Maintenance Instructions	34

MODEL NUMBER NOMENCLATURE

DIGIT NO.	1	2	3	4	5	6	7	8	9	10	11	12	13
CODE	4	2	C	E	0	0	2	2	0	0	A	L	I

PRODUCT SERIES
MODEL LETTERS
UNIT SIZE
COIL ROWS
STATIC PRESSURE
DRAIN PAN LENGTH
UNIT CONNECTION DIRECTION
CUSTOMER SOURCE & MOTOR POWER

DIGIT NO.1,2 product series
42.fan coil unit

DIGIT NO.3,4 model Type
CE:horizontal ceiling FCU

DIGIT NO.5,6,7 unit size(air volume=unit size×170m³/h)
002:2×170=340m³/h
003:3×170=510m³/h

DIGIT NO.8,9 coil rows
20:2R cooling
21:2R cooling+1R heating
30:3R cooling
31:3R cooling+1R heating

DIGIT NO.10 static pressure
0:0Pa standard
3:30Pa with static pressure
5:50Pa high static pressure

DIGIT NO.11 drain pan
A:standard
B:lengthening
C:stainless
D:stainless lengthening

DIGIT NO.12 unit handing(face to air blow)
L:left
R:right

DIGIT NO.13 customer source & power
0:sale in mainland 220V-1PH-50HZ(omissible)
1:export to Hongkong 220V-1PH-50HZ
2:export 220V-1PH-50HZ

PRODUCT FEATURES

42CE Fan Coil Units are the new energy saving products improved with advanced technology by Carrier. The units have advanced technology of low noise fan,air condition manufacture process and the last lanced sine wave fin. Based on 42CM FCU,42CE is developed to be an ultra-tranquil,high efficiency,convenient using and compact configuration product.

Ultra-tranquil:

The units use the wide wheel of latest design and low speed forward-curved blades,which are most suitable for the motor. Addition with good insulated noise eliminated material,unit noise is 2-5dB(A) lower than the same type unit.

High efficiency:

Aluminum lanced sine wave fin coils with copper tubing assure highly efficient heat transfer between primary and secondary coil surfaces.

Ultra thin:

The unit height is only 220mm so that they can save installation space and meet the requirement of all kinds of situations.

Agile selection:

Considering of the specialties and limit of installation,Carrier offer different drain pan to the consumer.

- Standard drain pan-reduce the installation space,especially to the narrow installation space.
- Lengthened drain pan-well collect possible sweating from field installed valves.
- External drain pan-350mm length can be selected to meet the requirement of all kind of condition.

Beside the characteristic above,the units have more development below:

1. Change the terminal from close to open structure and the wiring of motor to metal tube to assure more safety and reliability.
2. The latest noise eliminated fiberglass insulation can assure not only the good appearance and perfect performance but also well-insulated performance measuring up the international standard under the testing of most abominable sweat condition.
3. The round wheel of latest design can apply high temperature situation reliably.
4. The drain pan and insulation are mould holistically to make the process more easy and better as well as prevent the leak when welding the drain pan.

NOTE:Distinguish the diection of right or left by facing to the air outlet.

TECHICAL PARAMETER

2R coil/2+1R coil

Preformance	Model	002	003	004	005	006	008	010	012	014
Air Volume m^3/h	HIGH	410	550	750	900	1060	1500	1800	2110	2700
	MED	340	450	600	730	820	1230	1480	1730	2210
	LOW	260	350	470	560	640	950	1120	1360	1750
Cooling Capacity W		2050	2820	3840	4500	5230	7500	8300	10350	11510
Heating Capacity W		3480	4700	6230	7500	8720	12490	13830	17250	19190
Power Input W	0 Pa	26	30	52	75	85	125	160	190	250
	30 Pa	40	50	72	95	115	140	190	225	290
	50 Pa	50	65	88	115	128	200	225	248	336
Noise dB(A)	0 Pa	36	35	38	42	44	45	48	49	51
	30 Pa	38	39	42	45	46	47	48	49	51
	50 Pa	43	43	45	48	50	50	51	52	52
Water Flow l/min		6	8	11	13	15	21.5	24	30	33
Water Drop kPa		10	16	26	16	22	28	32	40	38
Fan	Type	Centrifugal, forward-curved Blades								
	Number	1	2	2	2	2	4	4	4	6
Motor	Type	Permanent Split Capacitor								
	Number	1	1	1	1	1	2	2	2	3
Coil	Row	2								
	Working Pressure	1.6MPa								
CONNS	In-Out	3/4"FPT								
	Condensing Drain	3/4"MPT								
Net Weight Kg		13	14.5	16.5	17.8	19	26.5	29	33	39
Accessories		Selected Switch,Return Air Plenum,External Drain Pan (L350mm)								

Note:
1. The data is the performance in high speed with relevant static pressure.
2. Cooling Conditions:Entering Water 7°C.Temperature Rise 5°C,Enterig Air Temperature 27°CDB.19.5°CWB.
   Heating Conditions:Entering Water 60°C, Air 21°CDB, the same water flow as the cooling conditions.
3. Heating Capacity in the table is the data of 2-piping coil, 4-piping coil is in page 25.
4. The noise is tested in the anechoic test room, measured with a fine audiometer located 1 meter away from the unit front panel and unit bottom panel.

TECHICAL PARAMETER

3R coil/3+1R coil

Preformance	Model	002	003	004	005	006	008	010	012	014
Air Volume m^3/h	HIGH	340	510	680	850	1020	1360	1700	2040	2380
	MED	280	420	560	690	830	1100	1390	1670	1950
	LOW	220	330	440	540	660	850	1080	1300	1540
Cooling Capacity W		2300	3200	4250	4720	5900	8150	9460	11600	13000
Heating Capacity W		3905	5330	7080	7870	9840	13570	15490	18640	21290
Power Input W	0 Pa	25	28	51	62	82	120	150	180	198
	30 Pa	41	52	65	96	116	130	180	215	280
	50 Pa	48	63	85	110	122	190	212	236	322
Noise dB(A)	0 Pa	36	35	37	41	44	44	47	49	48
	30 Pa	38	38	41	45	46	46	49	49	50
	50 Pa	43	43	45	48	50	50	51	51	52
Water Flow l/min		6.6	9	12.3	13.8	17	23.5	27	33	37
Water Drop kPa		14	25	20	24	35	35	40	40	47
Fan	Type	Centrifugal, forward-curved Blades								
	Number	1	2	2	2	2	4	4	4	6
Motor	Type	Permanent Split Capacitor								
	Number	1	1	1	1	1	2	2	2	3
Coil	Row	3								
	Working Pressure	1.6MPa								
CONNS	In-Out	3/4"FPT								
	Condensing Drain	3/4"MPT								
Net Weight Kg		14	15.6	17.7	19.1	20.5	28.3	31	35.3	41.5
Accessories		Selected Switch,Return Air Plenum,External Drain Pan (L350mm)								

Note: 1. The data is the performance in high speed with relevant static pressure.
2. Cooling Conditions:Entering Water 7°C,Temperature Rise 5°C,Enterig Air Temperature 27°CDB,19.5°CWB.
Heating Conditions:Entering Water 60°C, Air 21°CDB, the same water flow as the cooling conditions.
3. Heating Capacity in the table is the data of 2-piping coil, 4-piping coil is in page 25.
4. The noise is tested in the anechoic test room, measured with a fine audiometer located 1 meter away from the unit front panel and unit bottom panel.

PERFORMANCE DATA

2R COOLING CAPACITY

(W)

SIZE	WATER IN TEMP °C	WATER FLOW l/min	WATER DROP kpa	ENTERING WATER TEMPERATURE°C 17.0WB 24.0DB T.H	17.0WB 24.0DB S.H	18.0WB 25.0DB T.H	18.0WB 25.0DB S.H	18.0WB 26.0DB T.H	18.0WB 26.0DB S.H	19.0WB 26.0DB T.H	19.0WB 26.0DB S.H	19.0WB 27.0DB T.H	19.0WB 27.0DB S.H
002	5	4.5	7	1687	1391	1826	1401	1826	1511	1965	1412	1965	1511
		6	10	1965	1555	2135	1566	2135	1686	2296	1577	2296	1697
		7.5	14	2157	1653	2349	1686	2349	1807	2520	1708	2520	1818
		9	19	2306	1730	2509	1774	2509	1883	2691	1796	2691	1905
	6	4.5	7	1537	1336	1975	1347	1687	1456	1826	1347	1826	1467
		6	10	1804	1478	1965	1489	1965	1609	2135	1511	2135	1620
		7.5	14	1986	1566	2157	1588	2157	1708	2349	1620	2349	1730
		9	19	2125	1631	2306	1664	2306	1785	2509	1697	2509	1807
	7	4.5	7	1399	1281	1537	1281	1537	1401	1687	1303	1687	1401
		6	10	1644	1401	1804	1412	1804	1533	1965	1434	1965	1555
		7.5	14	1804	1478	1986	1500	1986	1620	2157	1533	2157	1642
		9	19	1922	1533	2125	1566	2125	1686	2306	1588	2306	1708
	8	4.5	7	1271	1237	1399	1237	1399	1347	1537	1248	1537	1347
		6	10	1473	1325	1644	1336	1644	1456	1804	1358	1804	1478
		7.5	14	1623	1380	1804	1412	1804	1533	1986	1434	1986	1555
		9	19	1740	1423	1922	1467	1922	1577	2125	1500	2125	1620
	9	4.5	7	1121	1150	1271	1193	1271	1203	1399	1193	1399	1314
		6	10	1313	1237	1473	1270	1473	1380	1644	1281	1644	1401
		7.5	14	1441	1281	1623	1325	1623	1423	1804	1347	1804	1434
		9	19	1537	1314	1740	1358	1740	1467	1922	1401	1922	1511
	10	4.5	7	982	930	1121	1050	1121	1065	1271	1161	1271	1259
		6	10	1142	1082	1313	1095	1313	1303	1473	1226	1473	1325
		7.5	14	1271	1182	1441	1215	1441	1336	1623	1259	1623	1380
		9	19	1356	1193	1537	1259	1537	1358	1740	1303	1740	1401
003	5	6	9	2406	1996	2608	2007	2608	2164	2810	2017	2810	2174
		8	16	2699	2153	2941	2174	2941	2331	3164	2205	3164	2362
		10	25	2911	2247	3164	2289	3164	2446	3396	2310	3396	2467
		12	34	3073	2320	3315	2362	3315	3502	3578	2394	3578	2550
	6	6	9	2214	1913	2406	1892	2406	2080	2608	1944	2608	2090
		8	16	2476	2038	2699	2070	2699	2226	2941	2090	2941	2247
		10	25	2668	2132	2911	2164	2911	2320	3164	2205	3164	2341
		12	34	2810	2185	3073	2226	3073	2394	3315	2268	3315	2435
	7	6	9	2011	1819	2214	1850	2214	1996	2305	1861	2406	2007
		8	16	2254	1934	2476	1955	2476	2111	2699	1996	2699	2143
		10	25	2436	1996	2668	2038	2668	2205	2608	2080	2911	2237
		12	34	2547	2038	2810	2090	2810	2247	3073	2143	3073	2299
	8	6	9	1809	1746	2011	1766	2011	1923	2214	1787	2214	1934
		8	16	2032	1819	2254	1861	2254	2007	2476	1881	2476	2038
		10	25	2183	1871	2436	1923	2436	2070	2668	1955	2668	2101
		12	34	2305	1913	2547	1955	2547	2111	2810	2007	2810	2164
	9	6	9	1607	1562	1809	1693	1809	1730	2011	1704	2011	1861
		8	16	1809	1714	2032	1746	2032	1892	2254	1787	2254	1934
		10	25	1941	1735	2183	1798	2183	1944	2436	1840	2436	1986
		12	34	2042	1766	2305	1819	2305	1965	2547	1881	2547	2017
	10	6	9	1415	1365	1607	1520	1607	1562	1809	1631	1809	1787
		8	16	1577	1510	1809	1641	1809	1787	2032	1672	2032	1819
		10	25	1708	1610	1941	1662	1941	1808	2183	1714	2183	1861
		12	34	1789	1620	2042	1672	2042	1819	2305	1746	2305	1881

Note: 1. TH-Total Heating, SH-Sensibe Heating
2. Data in table is the capacity at high speed. To calculate capacity at medium or low speed refer to the capacity Multiplier vs Speed table (Page13).

PERFORMANCE DATA

2R COOLING CAPACITY

(W)

SIZE	WATER IN TEMP °C	WATER FLOW l/min	WATER DROP kpa	ENTERING WATER TEMPERATURE°C 19.5WB 27.0DB T.H	19.5WB 27.0DB S.H	20.0WB 27.0DB T.H	20.0WB 27.0DB S.H	20.0WB 28.0DB T.H	20.0WB 28.0DB S.H	21.0WB 28.0DB T.H	21.0WB 28.0DB S.H	21.0WB 29.0DB T.H	21.0WB 29.0DB S.H	22.0WB 30.0DB T.H	22.0WB 30.0DB S.H
002	5	4.5	7	2039	1467	2103	1412	2103	1511	2253	1423	2253	1511	2381	1511
		6	10	2370	1642	2456	1588	2456	1708	2616	1609	2616	1719	2787	1719
		7.5	14	2616	1774	2712	1719	2712	1828	2883	1730	2883	1850	3064	1861
		9	19	2819	1861	2893	1807	2893	3033	3075	1828	3075	1949	3278	1960
	6	4.5	7	1901	1412	1965	1358	1965	1467	2103	1358	2103	1467	2253	1467
		6	10	2210	1577	2296	1533	2296	1631	2456	1544	2456	1642	2616	1653
		7.5	14	2434	1686	2520	1642	2520	1752	2712	1653	2712	1774	2883	1774
		9	19	2595	1774	2691	1719	2691	1828	2893	1741	2893	1850	3075	1872
	7	4.5	7	1751	1358	1826	1314	1826	1412	1965	1314	1965	1412	2103	1412
		6	10	2050	1500	2135	1456	2135	1566	2296	1467	2296	1566	2456	1577
		7.5	14	2264	1609	2349	1555	2349	1664	2520	1577	2520	1686	2712	1697
		9	19	2413	1664	2509	1631	2509	1730	2691	1653	2691	1752	2893	1785
	8	4.5	7	1612	1303	1687	1259	1687	1358	1826	1259	1826	1358	1965	1358
		6	10	1890	1423	1965	1391	1965	1489	2135	1401	2135	1500	2296	1511
		7.5	14	2071	1511	2157	1467	2157	1577	2349	1489	2349	1588	2520	1620
		9	19	2210	1566	2306	1533	2306	1642	2509	1555	2509	1664	2691	1697
	9	4.5	7	1473	1259	1537	1204	1537	1314	1687	1204	1687	1314	1826	1314
		6	10	1730	1347	1804	1314	1804	1412	1965	1325	1965	1423	2135	1434
		7.5	14	1901	1423	1986	1391	1986	1489	2157	1412	2157	1511	2349	1533
		9	19	2029	1478	2125	1434	2125	1544	2306	1467	2306	1566	2509	1588
	10	4.5	7	1324	1204	1399	1161	1399	1259	1537	1161	1537	1259	1687	1259
		6	10	1548	1281	1644	1237	1644	1347	1804	1259	1804	1358	1965	1380
		7.5	14	1708	1336	1804	1303	1804	1401	1986	1325	1986	1423	2157	1456
		9	19	1826	1380	1922	1336	1922	1434	2125	1380	2125	1478	2306	1500
003	5	6	9	2911	2101	3012	2028	3012	2174	3204	2038	3204	2174	3416	2174
		8	16	3265	2289	3386	2216	3386	2373	3608	2226	3608	2383	3831	2383
		10	25	3528	2404	3649	2331	3649	2488	3891	2362	3891	2509	4124	2519
		12	34	3699	2488	3831	2414	3831	2582	4094	2446	4094	2603	4336	2613
	6	6	9	2719	2017	2810	1944	2810	2090	3012	1955	3012	2101	3204	2101
		8	16	3042	2174	3164	2111	3164	2258	3386	2132	3386	2268	3608	2289
		10	25	3275	2289	3396	2226	3396	2373	3649	2247	3649	2394	3891	2404
		12	34	3447	2362	3578	2299	3578	2456	3831	2331	3831	2477	4094	2509
	7	6	9	2517	1944	2608	1871	2608	2017	2810	1881	2810	2017	3012	2028
		8	16	2820	2080	2941	2017	2941	2164	3164	2028	3164	2174	3386	2185
		10	25	3032	2164	3164	2101	3164	2258	3396	2143	3396	2289	3649	2299
		12	34	3194	2237	3315	2174	3315	2320	3578	2216	3578	2362	3831	2383
	8	6	9	2315	1861	2406	1798	2406	1934	2608	1798	2608	1944	2810	1944
		8	16	2598	1965	2699	1913	2699	2059	2941	1934	2941	2080	3164	2090
		10	25	2800	2059	2911	1996	2911	2143	3164	2028	3164	2164	3396	2185
		12	34	2941	2101	3073	2059	3073	2205	3315	2090	3315	2237	3578	2258
	9	6	9	2102	1787	2214	1714	2214	1861	2406	1725	2406	1871	2608	1871
		8	16	2375	1871	2476	1808	2476	1955	2699	1840	2699	1986	2941	1996
		10	25	2547	1934	2668	1881	2668	2017	2911	1913	2911	2059	3164	2080
		12	34	2678	1965	2810	1923	2810	2070	3073	1965	3073	2101	3315	2143
	10	6	9	1900	1714	2011	1641	2011	1787	2214	1651	2214	1798	2406	1798
		8	16	2143	1777	2254	1714	2254	1861	2476	1735	2476	1881	2699	1892
		10	25	2305	1808	2436	1766	2436	1892	2668	1798	2668	1934	2911	1965
		12	34	2426	1840	2547	1798	2547	1934	2810	1850	2810	2080	3073	2017

Note: 1. TH-Total Heating, SH-Sensibe Heating
2. Data in table is the capacity at high speed. To calculate capacity at medium or low speed refer to the capacity Multiplier vs Speed table (Page13).

PERFORMANCE DATA

2R COOLING CAPACITY

(W

SIZE	WATER IN TEMP °C	WATER FLOW l/min	WATER DROP kpa	ENTERING WATER TEMPERATURE°C 17.0WB 24.0DB T.H	17.0WB 24.0DB S.H	18.0WB 25.0DB T.H	18.0WB 25.0DB S.H	18.0WB 26.0DB T.H	18.0WB 26.0DB S.H	19.0WB 26.0DB T.H	19.0WB 26.0DB S.H	19.0WB 27.0DB T.H	19.0WB 27.0DB S.H
004	5	8	19	3190	2570	3450	2590	3450	2790	3720	2610	3720	2800
		11	26	3690	2840	3990	2870	3990	3080	4300	2900	4300	3110
		14	31	4020	3010	4360	3060	4360	3280	4700	3090	4700	3310
		17	37	4280	3140	4630	3190	4630	3410	4990	3230	4990	3450
	6	8	19	2620	2480	3190	2490	3190	2700	3450	2500	3540	2700
		11	26	3270	2700	3690	2730	3690	2940	3990	2770	3990	2970
		14	31	3690	2850	4020	2900	4020	3120	4360	2940	4360	3150
		17	37	3920	2950	4280	3010	4280	3230	4630	3060	4630	3280
	7	8	19	2650	2370	2920	2400	2920	2590	3190	2410	3190	2610
		11	26	3070	2560	3370	2590	3370	2800	3690	2630	3690	2840
		14	31	3360	2670	3690	2730	3690	2940	4020	2780	4020	2990
		17	37	3560	2770	3920	2830	3920	3040	4280	2880	4280	3090
	8	8	19	2380	2280	2650	2300	2650	2500	2920	2310	2920	2510
		11	26	2770	2420	3070	2470	3070	2660	3370	2500	3370	2700
		14	31	3020	2510	3360	2570	3360	2780	3690	2630	3690	2830
		17	37	3210	2570	3560	2650	3560	2850	3920	2710	3920	2920
	9	8	19	2130	2080	2380	2210	2380	2250	2650	2220	2650	2420
		11	26	2450	2270	2770	2330	2770	2520	3070	2360	3070	2560
		14	31	2690	2340	3020	2410	3020	2610	3360	2470	3360	2660
		17	37	2850	2370	3210	2470	3210	2660	3560	2540	3560	2730
	10	8	19	1860	1760	2130	2030	2130	2050	2380	2140	2380	2340
		11	26	2150	2130	2450	2190	2450	2380	2770	2230	2770	2430
		14	31	2350	2150	2690	2230	2690	2430	3020	2300	3020	2490
		17	37	2490	2170	2850	2270	2850	2470	3210	2360	3210	2550
005	5	11	13	3881	3365	4199	3386	4199	3649	4527	3413	4527	3660
		13	16	4321	3603	4679	3647	4679	3915	5041	3679	5041	3942
		17	25	4628	3763	5020	3822	5020	4096	5407	3865	5407	4139
		20	37	4871	3891	5272	3944	5272	4229	5684	3998	5684	4272
	6	11	13	3407	3224	3881	3252	3881	3515	4199	3268	4243	3526
		13	16	3910	3426	4321	3469	4321	3732	4679	3512	4679	3770
		17	25	4246	3564	4628	3623	4628	3897	5020	3677	5020	3940
		20	37	4464	3660	4871	3730	4871	4004	5272	3789	5272	4063
	7	11	13	3231	3085	3554	3122	3554	3375	3881	3138	3881	3396
		13	16	3602	3249	3959	3292	3959	3561	4321	3340	4321	3598
		17	25	3864	3350	4246	3420	4246	3683	4628	3479	4628	3742
		20	37	4057	3435	4464	3510	4464	3773	4871	3574	4871	3837
	8	11	13	2909	2755	3231	2988	3231	3046	3554	3004	3554	3262
		13	16	3245	3066	3602	3125	3602	3378	3959	3174	3959	3426
		17	25	3477	3146	3864	3221	3864	3479	4246	3291	4246	3543
		20	37	3650	3193	4057	3290	4057	3548	4464	3365	4464	3623
	9	11	13	2586	2795	2909	2858	2909	2870	3187	2880	3231	3138
		13	16	2878	2889	3245	2948	3245	3201	3602	2997	3602	3249
		17	25	3095	2937	3477	3017	3477	3269	3864	3092	3864	3334
		20	37	3249	2958	3650	3064	3650	3312	4057	3156	4057	3392
	10	11	13	2263	2151	2586	2350	2586	2380	2909	2762	2909	2819
		13	16	2520	2420	2878	2776	2878	2795	3245	2836	3245	3077
		17	25	2708	2560	3095	2803	3095	3055	3477	2888	3477	3130
		20	37	2837	2766	3249	2834	3249	3076	3650	2936	3650	3172

Note: 1. TH-Total Heating, SH-Sensibe Heating
2. Data in table is the capacity at high speed. To calculate capacity at medium or low speed refer to the capacity Multiplier vs Speed table (Page13).

PERFORMANCE DATA

2R COOLING CAPACITY

(W)

SIZE	WATER IN TEMP °C	WATER FLOW l/min	WATER DROP kpa	ENTERING WATER TEMPERATURE°C 19.5WB 27.0DB T.H	S.H	20.0WB 27.0DB T.H	S.H	20.0WB 28.0DB T.H	S.H	21.0WB 28.0DB T.H	S.H	21.0WB 29.0DB T.H	S.H	22.0WB 30.0DB T.H	S.H
004	5	8	19	3850	2710	3980	2620	3980	2800	4240	2630	4240	2810	4510	2800
		11	26	4450	3010	4610	2920	4610	3130	4910	2940	4910	3140	5220	3150
		14	31	4860	3220	5040	3130	5040	3340	5370	3150	5370	3360	5710	3370
		17	37	5160	3360	5350	3270	5350	3490	5700	3300	5700	3510	6060	3540
	6	8	19	3580	2610	3720	2510	3720	2710	3980	2502	3980	2710	4240	2710
		11	26	4140	2880	4300	2790	4300	2990	4610	2810	4610	3010	4910	3020
		14	31	4540	3060	4700	2980	4700	3170	5040	3000	5040	3210	5370	3220
		17	37	4810	3190	4990	3100	4990	3310	5350	3140	5350	3350	5700	3370
	7	8	19	3310	2510	3450	2420	3450	2610	3720	2430	3720	2620	3980	2620
		11	26	3840	2740	3990	2660	3990	2860	4300	2690	4300	2870	4610	2900
		14	31	4200	2910	4360	2830	4360	3020	4700	2860	4700	3060	5040	3080
		17	37	4450	3010	4630	2940	4630	3140	4990	2980	4990	3170	5350	3210
	8	8	19	3060	2420	3190	2330	3190	2510	3450	2340	3450	2520	3720	2520
		11	26	3540	2620	3690	2540	3690	2720	3990	2560	3990	2741	4300	2770
		14	31	3860	2740	4020	2670	4020	2870	4360	2710	4360	2910	4700	2930
		17	37	4090	2840	4280	2770	4280	2970	4630	2810	4630	3010	4990	3050
	9	8	19	2790	2330	2920	2230	2920	2430	3190	2240	3190	2430	3450	2430
		11	26	3220	2480	3370	2410	3370	2590	3690	2430	3690	2620	3990	2640
		14	31	3520	2590	3690	2510	3690	2710	4020	2560	4020	2760	4360	2780
		17	37	3740	2660	3920	2611	3920	2790	4280	2650	4280	2840	4630	2880
	10	8	19	2520	2240	2650	2150	2650	2340	2920	2160	2920	2340	3190	2350
		11	26	2920	2350	3070	2270	3070	2470	3370	2310	3370	2490	3690	2510
		14	31	3190	2430	3360	2360	3360	2550	3690	2420	3690	2590	4020	2640
		17	37	3380	2490	3560	2430	3560	2620	3920	2490	3920	2670	4280	2720
005	5	11	13	4685	3542	4849	3429	4849	3666	5172	3445	5172	3682	5495	3677
		13	16	5219	3824	5403	3711	5403	3969	5760	3732	5760	3985	6122	3995
		17	25	5595	4021	5794	3908	5794	4171	6181	3940	6181	4192	6573	4214
		20	37	5882	4165	6086	4046	6086	4315	6492	4084	6492	4341	6899	4373
	6	11	13	4363	3407	4527	3289	4527	3536	4849	3296	4849	3542	5172	3542
		13	16	4857	3657	5041	3539	5041	3797	5403	3571	5403	3824	5760	3834
		17	25	5218	3827	5407	3720	5407	3967	5794	3752	5794	4010	6181	4026
		20	37	5476	3955	5684	3843	5684	4106	6086	3891	6086	4143	6492	4175
	7	11	13	4040	3273	4199	3155	4199	3402	4527	3176	4527	3413	4849	3418
		13	16	4500	3480	4679	3378	4679	3630	5041	3410	5041	3647	5403	3673
		17	25	4831	3634	5020	3538	5020	3779	5407	3570	5407	3822	5794	3849
		20	37	5069	3735	5272	3644	5272	3896	5684	3692	5684	3934	6086	3977
	8	11	13	3718	3144	3881	3031	3881	3267	4199	3047	4199	3284	4527	3284
		13	16	4143	3319	4321	3217	4321	3459	4679	3249	4679	3481	5041	3512
		17	25	4440	3436	4628	3344	4628	3586	5020	3393	5020	3634	5407	3666
		20	37	4662	3526	4871	3435	4871	3737	5272	3489	5272	3730	5684	3778
	9	11	13	3395	3020	3554	2896	3554	3149	3881	2918	3881	3154	4199	3160
		13	16	3781	3147	3959	3056	3959	3292	4321	3082	4321	3324	4679	3357
		17	25	4053	3242	4246	3185	4246	3398	4628	3205	4628	3446	5020	3484
		20	37	4261	3306	4464	3237	4464	3473	4871	3290	4871	3526	5272	3574
	10	11	13	3067	2896	3231	2778	3231	3025	3554	2805	3554	3036	3881	3052
		13	16	3423	2980	3602	2889	3602	3131	3959	2932	3959	3163	4321	3190
		17	25	3671	3044	3864	2958	3864	3200	4246	3028	4246	3253	4628	3301
		20	37	3849	3097	4057	3022	4057	3252	4464	3091	4464	3317	4871	3381

Note: 1. TH-Total Heating, SH-Sensibe Heating
2. Data in table is the capacity at high speed. To calculate capacity at medium or low speed refer to the capacity Multiplier vs Speed table (Page13).

PERFORMANCE DATA

2R COOLING CAPACITY

(W)

SIZE	WATER IN TEMP °C	WATER FLOW l/min	WATER DROP kpa	ENTERING WATER TEMPERATURE°C 17.0WB 24.0DB T.H	17.0WB 24.0DB S.H	18.0WB 25.0DB T.H	18.0WB 25.0DB S.H	18.0WB 26.0DB T.H	18.0WB 26.0DB S.H	19.0WB 26.0DB T.H	19.0WB 26.0DB S.H	19.0WB 27.0DB T.H	19.0WB 27.0DB S.H
006	5	12	15	4630	3947	5010	3968	5010	4278	5400	4000	5400	4289
		15	22	5020	4139	5440	4193	5440	4503	5860	4225	5860	4524
		18	32	5310	4278	5760	4342	5760	4652	6200	4396	6200	4706
		21	45	5540	4396	6000	4449	6000	4781	6470	4513	6470	4824
	6	12	15	4240	3765	4630	3807	4630	4107	5010	3829	5010	4128
		15	22	4610	3936	5020	3989	5020	4289	5440	4032	5440	4332
		18	32	4870	4053	5310	4118	5310	4428	5760	4182	5760	4481
		21	45	5080	4139	5540	4214	5540	4524	6000	4278	6000	4588
	7	12	15	3860	3604	4240	3647	4240	3947	4630	3668	4630	3968
		15	22	4190	3733	4610	3786	4610	4096	5020	3840	5020	4128
		18	32	4430	3818	4870	3893	4870	4193	5310	3957	5310	4257
		21	45	4620	3882	5080	3968	5080	4267	5540	4043	5540	4342
	8	12	15	3480	3444	3860	3487	3860	3786	4240	3508	4240	3807
		15	22	3770	3519	4190	3583	4190	3882	4610	3647	4610	3936
		18	32	3990	3583	4430	3668	4430	3957	4870	3743	4870	4032
		21	45	4150	3615	4620	3722	4620	4021	5080	3807	5080	4096
	9	12	15	3080	2983	3480	3326	3480	3636	3860	3358	3860	3658
		15	22	3350	3326	3770	3380	3770	3679	4190	3444	4190	3733
		18	32	3550	3348	3990	3433	3990	3722	4430	3519	4430	3797
		21	45	3700	3358	4150	3465	4150	3754	4620	3572	4620	3840
	10	12	15	2700	2668	3080	3016	3080	2994	3480	3209	3480	3308
		15	22	2930	2850	3350	3187	3350	3265	3770	3262	3770	3529
		18	32	3110	3066	3550	3198	3550	3487	3990	3294	3990	3572
		21	45	3230	3187	3700	3219	3700	3487	4150	3326	4150	3594
008	5	15	15	6436	5617	6973	5670	6973	6111	7520	5703	7520	6132
		21.5	28	7197	6025	7793	6100	7793	6540	8389	6154	8389	6594
		27	42	7686	6261	8320	6358	8320	6809	8975	6444	8975	6884
		32	61	8027	6401	8701	6530	8701	6981	9365	6615	9365	7067
	6	15	15	5908	5380	6436	5434	6436	5874	6973	5466	6973	5896
		21.5	28	6602	5692	7197	5778	7197	6229	7793	5853	7793	6293
		27	42	7041	5896	7686	6003	7686	6444	8320	6111	8320	6530
		32	61	7363	6025	8027	6154	8027	6594	8701	6261	8701	6691
	7	15	15	5371	5144	5908	5198	5908	5638	6436	5241	6436	5660
		21.5	28	5996	5380	6602	5488	6602	5907	7197	5574	7197	5982
		27	42	6406	5531	7041	5660	7041	6078	7686	5767	7686	6186
		32	61	6689	5638	7363	5767	7363	6197	8027	5896	8027	6315
	8	15	15	4824	4908	5371	4962	5371	5291	5908	5005	5908	5434
		21.5	28	5391	5069	5996	5166	5996	5595	6602	5273	6602	5681
		27	42	5771	5155	6406	5305	6406	5724	7041	5423	7041	5831
		32	61	6016	5219	6689	5380	6689	5799	7363	5531	7363	5928
	9	15	15	4297	4682	4824	4747	4824	4766	5371	4800	5371	5209
		21.5	28	4795	4747	5391	4854	5391	5273	5996	4972	5996	5370
		27	42	5127	4779	5771	4951	5771	5348	6406	5080	6406	5488
		32	61	5352	4811	6016	4994	6016	5391	6689	5155	6689	5542
	10	15	15	3760	3715	4297	4221	4297	4271	4824	4575	4824	4694
		21.5	28	4199	4090	4795	4543	4795	4651	5391	4672	5391	5058
		27	42	4482	4382	5127	4586	5127	4962	5771	4736	5771	5123
		32	61	4678	4392	5352	4596	5352	4972	6016	4779	6016	5144

Note: 1. TH-Total Heating, SH-Sensibe Heating
2. Data in table is the capacity at high speed. To calculate capacity at medium or low speed refer to the capacity Multiplier vs Speed table (Page13).

PERFORMANCE DATA

2R COOLING CAPACITY

(W)

SIZE	WATER IN TEMP °C	WATER FLOW l/min	WATER DROP kpa	ENTERING WATER TEMPERATURE°C 19.5WB 27.0DB T.H	19.5WB 27.0DB S.H	20.0WB 27.0DB T.H	20.0WB 27.0DB S.H	20.0WB 28.0DB T.H	20.0WB 28.0DB S.H	21.0WB 28.0DB T.H	21.0WB 28.0DB S.H	21.0WB 29.0DB T.H	21.0WB 29.0DB S.H	22.0WB 30.0DB T.H	22.0WB 30.0DB S.H
006	5	12	15	5590	4150	5790	4021	5790	4299	6180	4043	6180	4321	6560	4321
		15	22	6070	4396	6280	4267	6280	4556	6700	4289	6700	4578	7120	4588
		18	32	6420	4567	6640	4439	6640	4738	7090	4481	7090	4759	7540	4791
		21	45	6700	4706	6920	4567	6920	4866	7390	4610	7390	4898	7850	4930
	6	12	15	5210	3989	5400	3861	5400	4139	5790	3882	5790	4150	6180	4150
		15	22	5650	4203	5860	4064	5860	4364	6280	4107	6280	4396	6700	4406
		18	32	5980	4353	6200	4225	6200	4513	6640	4267	6640	4556	7090	4578
		21	45	6230	4471	6470	4342	6470	4642	6920	4396	6920	4674	7390	4717
	7	12	15	4830	3829	5010	3690	5010	3979	5400	3722	5400	3989	5790	4000
		15	22	5230	4000	5440	3882	5440	4171	5860	3914	5860	4193	6280	4214
		18	32	5540	4128	5760	4021	5760	4299	6200	4053	6200	4342	6640	4374
		21	45	5770	4225	6000	4118	6000	4406	6470	4171	6470	4449	6920	4492
	8	12	15	4430	3668	4630	3540	4630	3818	5010	3561	5010	3840	5400	3840
		15	22	4810	3807	5020	3690	5020	3979	5440	3733	5440	4000	5860	4032
		18	32	5090	3914	5310	3807	5310	4075	5760	3861	5760	4128	6200	4171
		21	45	5310	3989	5540	3882	5540	4267	6000	3947	6000	4214	6470	4267
	9	12	15	4050	3519	4240	3380	4240	3668	4630	3412	4630	3679	5010	3690
		15	22	4400	3615	4610	3508	4610	3786	5020	3540	5020	3818	5440	3861
		18	32	4650	3690	4870	3658	4870	3872	5310	3647	5310	3914	5760	3968
		21	45	4850	3743	5080	3658	5080	3936	5540	3722	5540	3989	6000	4043
	10	12	15	3660	3369	3860	3230	3860	3519	4240	3273	4240	3540	4630	3561
		15	22	3980	3422	4190	3326	4190	3594	4610	3369	4610	3636	5020	3668
		18	32	4210	3465	4430	3369	4430	3647	4870	3444	4870	3711	5310	3754
		21	45	4380	3508	4620	3422	4620	3679	5080	3497	5080	3754	5540	3829
008	5	15	15	7783	5950	8057	5746	8057	6154	8584	5767	8584	6175	9121	6175
		21.5	28	8701	6411	8994	6218	8994	6648	9600	6261	9600	6669	10195	6691
		27	42	9287	6691	9609	6508	9609	6948	10254	6572	10254	6991	10889	7034
		32	61	9697	6884	10039	6712	10039	7142	10713	6787	10713	7206	11377	7249
	6	15	15	7246	5692	7520	5509	7520	5917	8057	5531	8057	5928	8584	5950
		21.5	28	8096	6111	8389	5917	8389	6347	8994	5982	8994	6379	9600	6422
		27	42	8643	6358	8975	6186	8975	6605	9609	6261	9609	6669	10254	6712
		32	61	9033	6519	9365	6358	9365	6787	10039	6444	10039	6852	10713	6905
	7	15	15	6709	5466	6973	5284	6973	5681	7520	5305	7520	5703	8057	5727
		21.5	28	7500	5810	7793	5638	7793	6046	8389	5692	8389	6100	8994	6132
		27	42	8008	6025	8320	5853	8320	6272	8975	5950	8975	6347	9609	6390
		32	61	8359	6154	8701	6003	8701	6422	9365	6111	9365	6508	10039	6572
	8	15	15	6172	5241	6436	5058	6436	5456	6973	5080	6973	5488	7520	5499
		21.5	28	6895	5509	7197	5348	7197	5746	7793	5423	7793	5810	8389	5853
		27	42	7373	5681	7686	5531	7686	5928	8320	5617	8320	6025	8975	6078
		32	61	7705	5799	8027	5660	8027	6046	8701	5756	8701	6143	9365	6229
	9	15	15	5635	5348	5908	4833	5908	5230	6436	4876	6436	5262	6973	5284
		21.5	28	6289	5219	6602	5058	6602	5456	7197	5133	7197	5520	7793	5584
		27	42	6719	5348	7041	5209	7041	5595	7686	5305	7686	5681	8320	5767
		32	61	7031	5423	7363	5295	7363	5681	8027	5423	8027	5799	8701	5896
	10	15	15	5098	4811	5371	4618	5371	5026	5908	4661	5908	5048	6436	5069
		21.5	28	5703	4919	5996	4768	5996	5155	6602	4854	6602	5230	7197	5295
		27	42	6084	4994	6406	4876	6406	5241	7041	4983	7041	5359	7686	5445
		32	61	6357	5048	6689	4929	6689	5305	7363	5069	7363	5434	8027	5542

Note: 1. TH-Total Heating, SH-Sensibe Heating
2. Data in table is the capacity at high speed. To calculate capacity at medium or low speed refer to the capacity Multiplier vs Speed table (Page13).

PERFORMANCE DATA

2R COOLING CAPACITY

(W)

SIZE	WATER IN TEMP °C	WATER FLOW l/min	WATER DROP kpa	ENTERING WATER TEMPERATURE°C 17.0WB 24.0DB T.H	17.0WB 24.0DB S.H	18.0WB 25.0DB T.H	18.0WB 25.0DB S.H	18.0WB 26.0DB T.H	18.0WB 26.0DB S.H	19.0WB 26.0DB T.H	19.0WB 26.0DB S.H	19.0WB 27.0DB T.H	19.0WB 27.0DB S.H
010	5	19	24	7443	6483	8062	6545	8062	7058	8690	6587	8690	7079
		24	32	7967	6660	8624	6744	8624	7225	9280	6796	9280	7288
		31	50	8281	6734	8966	6838	8966	7330	9671	6932	9671	7413
		37	68	8509	6776	9223	6911	9223	7382	9928	6995	9928	7476
	6	19	24	6834	6211	7443	6274	7443	6786	8062	6315	8062	6807
		24	32	7310	6295	7967	6389	7967	6891	8624	6472	8624	6953
		31	50	7586	6347	8281	6462	8281	6932	8966	6577	8966	7026
		37	68	7805	6378	8500	6514	8500	6974	9223	6629	9223	7079
	7	19	24	6206	5939	6825	6002	6825	6504	7434	6044	7434	6535
		24	32	6634	5960	7301	6064	7301	6535	7957	6159	7957	6608
		31	50	6891	6012	7577	6085	7577	6587	8271	6200	8271	6650
		37	68	7072	6054	7786	6106	7786	6608	8490	6221	8490	6671
	8	19	24	5578	5667	6206	5730	6206	6021	6825	5782	6825	6274
		24	32	5968	5709	6634	5772	6634	6253	7310	5824	7310	6315
		31	50	6215	5730	6901	5814	6901	6274	7586	5845	7586	6357
		37	68	6377	5751	7091	5834	7091	6295	7805	5866	6853	6378
	9	19	24	4531	4235	5092	5008	5092	5038	5673	5061	5673	5489
		24	32	5311	5249	5968	5364	5968	5834	6644	5500	6644	5939
		31	50	5521	5270	6215	5385	6215	5855	6901	5521	6901	5960
		37	68	5673	5280	6377	5395	6377	5876	7091	5542	7091	5970
	10	19	24	4350	4280	4969	4810	4969	4868	5578	4988	5578	5353
		24	32	4645	4611	5302	4831	5302	5228	5958	5019	5958	5395
		31	50	4835	4632	5530	4852	5530	5249	6225	5040	6225	5416
		37	68	4950	4642	5673	4862	5673	5259	6377	5061	6377	5437
012	5	24	32	9361	7923	10142	7998	10142	8607	10913	8062	10913	8650
		30	40	9935	8158	10765	8265	10765	8864	11586	8361	11586	8949
		36	60	10350	8265	11210	8457	11210	9056	12070	8554	12070	9152
		42	82	10647	8447	11546	8575	11546	9174	12426	8703	12426	9291
	6	24	32	8581	7549	9361	7634	9361	8233	10142	7709	10142	8297
		30	40	9104	7730	9935	7848	9935	8447	10765	7955	10765	8564
		36	60	9480	7859	10350	7998	10350	8575	11210	8115	11210	8693
		42	82	9757	7933	10647	8094	10647	8682	11546	8233	11546	8800
	7	24	32	7800	7174	8581	7271	8581	7869	9361	7345	9361	7933
		30	40	8274	7303	9104	7431	9104	8019	9935	7549	9935	8115
		36	60	8620	7377	9480	7538	9480	8105	10350	7677	10350	8244
		42	82	8877	7431	9757	7613	9757	8179	10647	7773	10647	8318
	8	24	32	7009	6811	7800	6918	7800	7506	8581	7003	8581	7570
		30	40	7454	6864	8274	7014	8274	7581	9104	7142	9104	7698
		36	60	7760	6896	8620	7078	8620	7634	9480	7238	9480	7784
		42	82	7987	6918	8877	7110	8877	7677	9757	7303	9757	7837
	9	24	32	6228	6094	7009	6565	7009	6825	7800	6661	7800	7228
		30	40	6623	6405	7454	6586	7454	7217	8274	6736	8274	7292
		36	60	6900	6426	7760	6608	7760	7260	8620	6789	8620	7313
		42	82	7108	6458	7987	6618	7987	7303	8877	6811	8877	7335
	10	24	32	5457	5302	6228	6105	6228	6138	7009	6330	7009	6821
		30	40	5793	5586	6623	6127	6623	6450	7454	6415	7454	6843
		36	60	6040	5998	6900	6169	6900	6704	7760	6469	7760	6864
		42	82	6208	6137	7108	6223	7108	6736	7987	6511	7987	6886

Note: 1. TH-Total Heating, SH-Sensibe Heating
2. Data in table is the capacity at high speed. To calculate capacity at medium or low speed refer to the capacity Multiplier vs Speed table (Page13).

PERFORMANCE DATA

2R COOLING CAPACITY

(W)

SIZE	WATER IN TEMP °C	WATER FLOW l/min	WATER DROP kpa	ENTERING WATER TEMPERATURE°C 19.5WB 27.0DB T.H	S.H	20.0WB 27.0DB T.H	S.H	20.0WB 28.0DB T.H	S.H	21.0WB 28.0DB T.H	S.H	21.0WB 29.0DB T.H	S.H	22.0WB 30.0DB T.H	S.H
010	5	19	24	9004	6870	9318	6640	9318	7110	9928	6660	9928	7131	10546	7131
		24	32	9633	7089	9956	6870	9956	7351	10622	6922	10622	7371	11279	7392
		31	50	10013	7204	10356	7006	10356	7476	11051	7068	11051	7528	11736	7570
		37	68	10356	7288	10642	7100	10642	7560	11355	7183	11355	7622	12060	7675
	6	19	24	8386	6577	8700	6368	8700	6838	9318	6389	9318	6849	9928	6870
		24	32	8966	6755	9290	6545	9290	7016	9956	6608	9956	7047	10632	7100
		31	50	9318	6838	9671	6660	9671	7110	10356	6734	10356	7173	11051	7225
		37	68	9575	6901	9918	6723	9918	7183	10642	6817	10642	7246	11355	7309
	7	19	24	7757	6305	8062	6096	8062	6556	8690	6127	8690	6577	9309	6608
		24	32	8300	6420	8624	6232	8624	6681	9280	6284	9280	6734	9947	6776
		31	50	8624	6472	8957	6295	8957	6744	9661	6399	9661	6817	10346	6870
		37	68	8843	6493	9195	6336	9195	6776	9899	6451	9899	6870	10613	6943
	8	19	24	7139	6054	7443	5834	7443	6295	8062	5866	8062	6336	8690	6347
		24	32	7634	6085	7967	5908	7967	6347	8624	5991	8624	6420	9280	6472
		31	50	7948	6117	8281	5949	8281	6378	8966	6044	8966	6483	9671	6535
		37	68	8167	6138	8500	5991	8500	6399	9214	6085	9214	6504	9918	6587
	9	19	24	5949	5636	6235	5092	6235	5510	6796	5144	6796	5552	7358	5573
		24	32	6967	5772	7310	5594	7310	6033	7967	5678	7967	6106	8633	6180
		31	50	7243	5793	7586	5615	7586	6054	8281	5709	8281	6117	8966	6211
		37	68	7453	5814	7805	5625	7805	6064	8509	5740	8509	6138	9223	6242
	10	19	24	5901	5353	6215	5144	6215	5552	6834	5280	6834	5657	7443	5793
		24	32	6311	5374	6634	5176	6634	5584	7301	5322	7301	5699	7957	5824
		31	50	6568	5385	6910	5197	6910	5604	7596	5343	7596	5730	8290	5845
		37	68	6739	5395	7091	5218	7091	5615	7805	5364	7805	5751	8509	5866
012	5	24	32	11299	8383	11694	8115	11694	8693	12475	8158	12475	8714	13256	8725
		30	40	12001	8749	12416	8436	12416	9003	13246	8628	13246	8628	14077	9088
		36	60	12495	8906	12930	8650	12930	9227	13800	8725	13800	9291	14660	9334
		42	82	12861	9056	13316	8800	13316	9377	14195	8896	14195	9452	15085	9516
	6	24	32	10518	8019	10913	7773	10913	8329	11694	7827	11694	8372	12475	8383
		30	40	11170	8286	11586	8030	11586	8607	12416	8105	12416	8650	13246	8703
		36	60	11635	8457	12070	8222	12070	8789	12930	8308	12930	8864	13800	8917
		42	82	11981	8575	12426	8361	12426	8917	13316	8457	13316	9003	14195	9078
	7	24	32	9747	7677	10142	7303	10142	7987	10913	7474	10913	8019	11694	8062
		30	40	10350	7880	10765	7645	10765	8211	11586	7720	11586	8265	12416	8318
		36	60	10775	8019	11210	7794	11210	8340	12070	7901	12070	8436	12930	8500
		42	82	11091	8105	11546	7912	11546	8447	12426	8019	12426	8554	13316	8639
	8	24	32	8966	7324	9361	7089	9361	7634	10142	7153	10142	7688	10913	7698
		30	40	9520	7474	9935	7249	9935	7794	10765	7345	10765	7880	11586	7944
		36	60	9915	7570	10350	7356	10350	7912	11210	7484	11210	8094	12426	8211
		42	82	10212	7645	10647	7452	10647	7987	11546	7581	11546	8094	12426	8211
	9	24	32	8185	6993	8581	6757	8581	7303	9361	6811	9361	7345	10142	7399
		30	40	8689	7078	9104	6864	9104	7399	9935	6960	9935	7484	10765	7559
		36	60	9045	7121	9480	6939	9480	7463	10350	7067	10350	7581	11210	7688
		42	82	9322	7164	9757	6993	9757	7495	10647	7142	10647	7645	11546	7762
	10	24	32	7404	6650	7800	6415	7800	6960	8581	6490	9569	7025	9361	7078
		30	40	7859	6661	8274	6469	8274	6993	9104	6576	9104	7099	9935	7185
		36	60	8185	6682	8620	6501	8620	7014	9480	6650	9480	7153	10350	7260
		42	82	8422	6682	8877	6533	8877	7025	9757	6693	9757	7185	10647	7324

Note: 1. TH-Total Heating, SH-Sensibe Heating
2. Data in table is the capacity at high speed. To calculate capacity at medium or low speed refer to the capacity Multiplier vs Speed table (Page13).

PERFORMANCE DATA

2R COOLING CAPACITY

(W)

SIZE	WATER IN TEMP °C	WATER FLOW l/min	WATER DROP kpa	ENTERING WATER TEMPERATURE°C 17.0WB 24.0DB T.H	S.H	18.0WB 25.0DB T.H	S.H	18.0WB 26.0DB T.H	S.H	19.0WB 26.0DB T.H	S.H	19.0WB 27.0DB T.H	S.H
014	5	27	26	10640	9580	11530	9660	11530	10408	12410	9741	12410	10454
		33	38	11050	9603	11970	9775	11970	10477	12880	9890	12880	10580
		39	52	11340	9626	12280	9844	12280	10546	13220	9959	13220	10661
		45	72	11530	9729	12500	9867	12500	10557	13450	10017	13450	10695
	6	27	26	9750	9085	10640	9223	10640	9948	11530	9315	11530	10028
		33	38	10100	9108	11020	9258	11020	9959	11950	9384	11950	10097
		39	52	10380	9120	11330	9304	11330	9982	12270	9442	12270	10120
		45	72	10570	9131	11530	9315	11530	9994	12500	9476	12500	10132
	7	27	26	8870	8464	9760	8671	9760	9315	10650	8878	10650	9476
		33	38	9200	8510	10120	8717	10120	9361	11040	8924	11040	9522
		39	52	9440	8533	10380	8740	10380	9396	11330	8936	11330	9557
		45	72	9620	8556	10570	8763	10570	9419	11530	8947	11530	9580
	8	27	26	7970	7832	8870	8073	8870	8717	9760	8315	9760	8924
		33	38	8290	7901	9200	8119	9200	8740	10120	8338	10120	8970
		39	52	8500	7935	9440	8154	9440	8775	10380	8384	10380	8993
		45	72	8650	7958	9610	8177	9610	8832	10560	8407	10560	9016
	9	27	26	7080	6945	7970	7475	7970	8119	8870	7740	8870	8338
		33	38	7370	7303	8290	7556	8290	8177	9200	7786	9200	8395
		39	52	7560	7337	8500	7590	8500	8211	9440	7820	9440	8418
		45	72	7700	7372	8650	7625	8650	8246	9620	7855	9620	8453
	10	27	26	6200	6670	7080	6912	7080	6960	7970	7222	7970	7774
		33	38	6450	6716	7370	6958	7370	7058	8300	7245	8300	7820
		39	52	6620	6528	7560	7015	7560	7225	8500	7280	8500	7855
		45	72	6730	6578	7710	7038	7710	7636	8660	7303	8660	7866

Note: 1. TH-Total Heating, SH-Sensibe Heating
2. Data in table is the capacity at high speed. To calculate capacity at medium or low speed refer to the capacity Multiplier vs Speed table (Page13).

CAPACITY MULTIPLIER VS SPEED

UNIT	COOLING CAPACITY MED T.H	MED S.H	LOW T.H	LOW S.H	HEATING CAPACITY MED	LOW
002	0.85	0.83	0.70	0.66	0.84	0.72
003	0.86	0.84	0.71	0.67	0.85	0.73
004	0.87	0.85	0.74	0.70	0.86	0.74
005	0.87	0.85	0.73	0.70	0.86	0.74
006	0.89	0.87	0.75	0.70	0.87	0.75
008	0.86	0.84	0.73	0.69	0.86	0.74
010	0.89	0.87	0.75	0.70	0.86	0.74
012	0.88	0.86	0.75	0.70	0.87	0.75
014	0.89	0.87	0.75	0.69	0.87	0.75

2R COOLING CAPACITY

(W)

SIZE	WATER INTEMP °C	WATER FLOW l/min	WATER DROP kpa	ENTERING WATER TEMPERATURE°C 19.5WB 27.0DB T.H	19.5WB 27.0DB S.H	20.0WB 27.0DB T.H	20.0WB 27.0DB S.H	20.0WB 28.0DB T.H	20.0WB 28.0DB S.H	21.0WB 28.0DB T.H	21.0WB 28.0DB S.H	21.0WB 29.0DB T.H	21.0WB 29.0DB S.H	22.0WB 30.0DB T.H	22.0WB 30.0DB S.H
014	5	27	26	12850	10132	13300	9810	13300	10511	14180	9867	14180	10534	15070	10546
		33	38	13350	10350	13810	9971	13800	10649	14730	9948	14730	10707	15660	10741
		39	52	13690	10373	14160	10074	14160	10741	15120	10155	15120	10822	16060	10868
		45	72	13930	10419	14420	10132	14420	10799	15370	10235	15370	10879	16340	10960
	6	27	26	11960	9695	12400	9396	12400	10063	13290	9453	13290	10120	14180	10132
		33	38	12400	9775	12860	9476	12860	10155	13780	9557	13780	10201	14700	10270
		39	52	12740	9844	13210	9568	13210	10224	14150	9672	14150	10316	15110	10373
		45	72	12980	9879	13460	9626	13460	10270	14420	9741	14420	10362	15370	10454
	7	27	26	11090	9281	11540	8832	11540	9660	12410	9039	12410	9695	13300	9752
		33	38	11510	9315	11970	9039	11970	9695	12880	9120	12880	9764	13800	9833
		39	52	11800	9327	12270	9074	12270	9706	13210	9200	13210	9821	14160	9890
		45	72	12020	9338	12510	9108	12510	9729	13460	9235	13460	9856	14430	9948
	8	27	26	10200	8706	10650	8510	10650	9120	11530	8648	11530	9223	12410	9315
		33	38	10590	8740	11050	8533	11050	9154	11970	8683	11970	9258	12880	9396
		39	52	10860	8775	11330	8556	11330	9177	12270	8706	12270	9292	13210	9442
		45	72	11060	8798	11530	8579	11530	9200	12500	8729	12500	9315	13450	9453
	9	27	26	9310	8165	9260	7993	9260	8533	10650	8165	10650	8694	11530	8855
		33	38	9670	8188	10130	8027	10130	8579	11050	8200	11050	8740	11980	8901
		39	52	9910	8223	10380	8050	10380	8602	11340	8223	11340	8786	12280	8924
		45	72	10100	8257	10570	8062	10570	8637	11530	8234	11530	8809	12510	8947
	10	27	26	8420	7590	8870	7441	8870	8004	9750	7625	9750	8200	10640	8487
		33	38	8750	7648	9210	7475	9210	8050	10130	7671	10130	8223	11060	8395
		39	52	8970	7682	9450	7510	9450	8073	10390	7705	10390	8257	11340	8430
		45	72	9130	7705	9620	7533	9620	8096	10580	7717	10580	8280	11540	8441

Note: 1. TH-Total Heating, SH-Sensibe Heating
2. Data in table is the capacity at high speed. To calculate capacity at medium or low speed refer to the capacity Multiplier vs Speed table (Page13).

PERFORMANCE DATA

3R COOLING CAPACITY

(W)

SIZE	WATER IN TEMP °C	WATER FLOW l/min	WATER DROP kpa	ENTERING WATER TEMPERATURE°C 17.0WB 24.0DB T.H	17.0WB 24.0DB S.H	18.0WB 25.0DB T.H	18.0WB 25.0DB S.H	18.0WB 26.0DB T.H	18.0WB 26.0DB S.H	19.0WB 26.0DB T.H	19.0WB 26.0DB S.H	19.0WB 27.0DB T.H	19.0WB 27.0DB S.H
002	5	5	10	1893	1409	2048	1420	2048	1531	2204	1431	2204	1531
		6.6	14	2204	1575	2396	1587	2396	1709	2576	1598	2576	1720
		8.4	19	2420	1675	2635	1709	2635	1831	2827	1731	2827	1842
		10	25	2588	1753	2815	1797	2815	1908	3019	1820	3019	1931
	6	5	10	1725	1354	2216	1365	1893	1476	2048	1365	2048	1487
		6.6	14	2024	1498	2204	1509	2204	1631	2396	1531	2396	1642
		8.4	19	2228	1587	2420	1609	2420	1731	2635	1642	2635	1753
		10	25	2384	1653	2588	1686	2588	1808	2815	1720	2815	1831
	7	5	10	1569	1298	1725	1298	1725	1420	1893	1320	1893	1420
		6.6	14	1845	1420	2024	1431	2024	1553	2204	1453	2204	1575
		8.4	19	2024	1498	2228	1520	2228	1642	2420	1553	2420	1664
		10	25	2156	1553	2384	1587	2384	1709	2588	1609	2588	1731
	8	5	10	1426	1254	1569	1254	1569	1365	1725	1265	1725	1365
		6.6	14	1653	1342	1845	1354	1845	1476	2024	1376	2024	1498
		8.4	19	1821	1398	2024	1431	2024	1553	2228	1453	2228	1575
		10	25	1953	1442	2156	1487	2156	1598	2384	1520	2384	1642
	9	5	10	1258	1165	1426	1209	1426	1320	1569	1209	1569	1331
		6.6	14	1473	1254	1653	1287	1653	1398	1845	1298	1845	1420
		8.4	19	1617	1298	1821	1342	1821	1442	2024	1365	2024	1453
		10	25	1725	1331	1953	1376	1953	1487	2156	1420	2156	1531
	10	5	10	1102	1021	1258	1165	1258	1165	1426	1176	1426	1276
		6.6	14	1282	1176	1473	1109	1473	1320	1653	1243	1653	1342
		8.4	19	1426	1198	1617	1232	1617	1354	1821	1276	1821	1398
		10	25	1521	1209	1725	1276	1725	1376	1953	1320	1953	1420
003	5	7	15	2730	2073	2959	2084	2959	2247	3189	2095	3189	2258
		9	25	3062	2236	3338	2258	3338	2421	3590	2290	3590	2453
		11	34	3303	2334	3590	2377	3590	2540	3854	2399	3854	2562
		13.6	42	3487	2410	3762	2453	3762	3636	4060	2486	4060	2648
	6	7	15	2512	1986	2730	1965	2730	2160	2959	2019	2959	2171
		9	25	2810	2117	3062	2149	3062	2312	3338	2171	3338	2334
		11	34	3028	2214	3303	2247	3303	2410	3590	2290	3590	2431
		13.6	42	3189	2269	3487	2312	3487	2486	3762	2355	3762	2529
	7	7	15	2282	1889	2512	1921	2512	2073	2615	1932	2730	2084
		9	25	2558	2008	2810	2030	2810	2193	3062	2073	3062	2225
		11	34	2764	2073	3028	2117	3028	2290	2959	2160	3303	2323
		13.6	42	2890	2117	3189	2171	3189	2334	3487	2225	3487	2388
	8	7	15	2053	1813	2282	1834	2282	1997	2512	1856	2512	2008
		9	25	2305	1889	2558	1932	2558	2084	2810	1954	2810	2117
		11	34	2477	1943	2764	1997	2764	2149	3028	2030	3028	2182
		13.6	42	2615	1986	2890	2030	2890	2193	3189	2084	3189	2247
	9	7	15	1824	1726	2053	1758	2053	1921	2282	1769	2282	1932
		9	25	2053	1780	2305	1813	2305	1965	2558	1856	2558	2008
		11	34	2202	1802	2477	1867	2477	2019	2764	1910	2764	2062
		13.6	42	2317	1834	2615	1889	2615	2041	2890	1954	2890	2095
	10	7	15	1606	1520	1824	1682	1824	1726	2053	1693	2053	1856
		9	25	1789	1672	2053	1704	2053	1856	2305	1737	2305	1889
		11	34	1938	1672	2202	1726	2202	1878	2477	1780	2477	1932
		13.6	42	2030	1682	2317	1737	2317	1889	2615	1813	2615	1954

Note: 1. TH-Total Heating, SH-Sensibe Heating
2. Data in table is the capacity at high speed. To calculate capacity at medium or low speed refer to the capacity Multiplier vs Speed table (Page13).

3R COOLING CAPACITY

(W)

SIZE	WATER IN TEMP °C	WATER FLOW l/min	WATER DROP kpa	ENTERING WATER TEMPERATURE°C 19.5WB 27.0DB T.H	S.H	20.0WB 27.0DB T.H	S.H	28.0DB T.H	S.H	21.0WB 28.0DB T.H	S.H	29.0DB T.H	S.H	22.0WB 30.0DB T.H	S.H
002	5	5	10	2288	1487	2360	1431	2360	1531	2528	1442	2528	1531	2671	1531
		6.6	14	2659	1664	2755	1609	2755	1731	2935	1631	2935	1742	3127	1742
		8.4	19	2935	1797	3043	1742	3043	1853	3234	1753	3234	1875	3438	1886
		10	25	3163	1886	3246	1831	3246	3073	3450	1853	3450	1975	3678	1986
	6	5	10	2132	1431	2204	1376	2204	1487	2360	1376	2360	1487	2528	1487
		6.6	14	2480	1598	2576	1553	2576	1653	2755	1564	2755	1664	2935	1675
		8.4	19	2731	1709	2827	1664	2827	1775	3043	1675	3043	1797	3234	1797
		10	25	2911	1797	3019	1742	3019	1853	3246	1764	3246	1875	3450	1897
	7	5	10	1965	1376	2048	1331	2048	1431	2204	1331	2204	1431	2360	1431
		6.6	14	2300	1520	2396	1476	2396	1587	2576	1487	2576	1587	2755	1598
		8.4	19	2540	1631	2635	1575	2635	1686	2827	1598	2827	1709	3043	1720
		10	25	2707	1686	2815	1653	2815	1753	3019	1675	3019	1775	3246	1808
	8	5	10	1809	1320	1893	1276	1893	1376	2048	1276	2048	1376	2204	1376
		6.6	14	2120	1442	2204	1409	2204	1509	2396	1420	2396	1520	2576	1531
		8.4	19	2324	1531	2420	1487	2420	1598	2635	1509	2635	1609	2827	1642
		10	25	2480	1587	2588	1553	2588	1664	2815	1575	2815	1686	3019	1720
	9	5	10	1653	1276	1725	1220	1725	1331	1893	1220	1893	1331	2048	1331
		6.6	14	1941	1365	2024	1331	2024	1431	2204	1342	2204	1442	2396	1453
		8.4	19	2132	1442	2228	1409	2228	1509	2420	1431	2420	1531	2635	1553
		10	25	2276	1498	2384	1453	2384	1564	2588	1487	2588	1587	2815	1609
	10	5	10	1485	1220	1569	1176	1569	1276	1725	1176	1725	1276	1893	1276
		6.6	14	1737	1298	1845	1254	1845	1365	2024	1276	2024	1376	2204	1398
		8.4	19	1917	1354	2024	1320	2024	1420	2228	1342	2228	1442	2420	1476
		10	25	2048	1398	2156	1354	2156	1453	2384	1398	2384	1498	2588	1520
003	5	7	15	3303	2182	3418	2106	3418	2258	3636	2117	3636	2258	3877	2258
		9	25	3705	2377	3842	2301	3842	2464	4095	2312	4095	2475	4347	2475
		11	34	4003	2496	4141	2421	4141	2583	4416	2453	4416	2605	4680	2616
		13.6	42	4198	2583	4347	2507	4347	2681	4645	2540	4645	2703	4920	2714
	6	7	15	3085	2095	3189	2019	3189	2171	3418	2030	3418	2182	3636	2182
		9	25	3452	2258	3590	2193	3590	2345	3842	2214	3842	2355	4095	2377
		11	34	3716	2377	3854	2312	3854	2464	4141	2334	4141	2486	4416	2496
		13.6	42	3911	2453	4060	2388	4060	2551	4347	2421	4347	2572	4645	2605
	7	7	15	2856	2019	2959	1943	2959	2095	3189	1954	3189	2095	3418	2106
		9	25	3200	2160	3338	2095	3338	2247	3590	2106	3590	2258	3842	2269
		11	34	3441	2247	3590	2182	3590	2345	3854	2225	3854	2377	4141	2388
		13.6	42	3624	2323	3762	2258	3762	2410	4060	2301	4060	2453	4347	2475
	8	7	15	2627	1932	2730	1867	2730	2008	2959	1867	2959	2019	3189	2019
		9	25	2948	2041	3062	1986	3062	2138	3338	2008	3338	2160	3590	2171
		11	34	3177	2138	3303	2073	3303	2225	3590	2106	3590	2247	3854	2269
		13.6	42	3338	2182	3487	2138	3487	2290	3762	2171	3762	2323	4060	2345
	9	7	15	2386	1856	2512	1780	2512	1932	2730	1791	2730	1943	2959	1943
		9	25	2695	1943	2810	1878	2810	2030	3062	1910	3062	2062	3338	2073
		11	34	2890	2008	3028	1954	3028	2095	3303	1986	3303	2138	3590	2160
		13.6	42	3039	2041	3189	1997	3189	2149	3487	2041	3487	2182	3762	2225
	10	7	15	2156	1780	2282	1704	2282	1856	2512	1715	2512	1867	2730	1867
		9	25	2432	1845	2558	1780	2558	1932	2810	1802	2810	1954	3062	1965
		11	34	2615	1878	2764	1834	2764	1965	3028	1867	3028	2008	3303	2041
		13.6	42	2753	1910	2890	1867	2890	2008	3189	1921	3189	2160	3487	2095

Note: 1. TH-Total Heating, SH-Sensibe Heating
2. Data in table is the capacity at high speed. To calculate capacity at medium or low speed refer to the capacity Multiplier vs Speed table (Page13).

PERFORMANCE DATA

3R COOLING CAPACITY

(W)

SIZE	WATER IN TEMP °C	WATER FLOW l/min	WATER DROP kpa	ENTERING WATER TEMPERATURE°C 17.0WB 24.0DB T.H	17.0WB 24.0DB S.H	18.0WB 25.0DB T.H	18.0WB 25.0DB S.H	18.0WB 26.0DB T.H	18.0WB 26.0DB S.H	19.0WB 26.0DB T.H	19.0WB 26.0DB S.H	19.0WB 27.0DB T.H	19.0WB 27.0DB S.H
004	5	9	11	3531	2795	3818	2817	3818	3034	4117	2839	4117	3045
		12.3	20	4084	3089	4416	3121	4416	3350	4759	3154	4759	3382
		15.6	29	4449	3274	4826	3328	4826	3567	5202	3361	5202	3600
		19	38	4737	3415	5124	3469	5124	3709	5523	3513	5523	3752
	6	9	11	2900	2697	3531	2708	3531	2936	3818	2719	3918	2936
		12.3	20	3619	2936	4084	2969	4084	3198	4416	3013	4416	3230
		15.6	29	4084	3100	4449	3154	4449	3393	4826	3198	4826	3426
		19	38	4339	3208	4737	3274	4737	3513	5124	3328	5124	3567
	8	9	11	2933	2578	3232	2610	3232	2817	3531	2621	3531	2839
		12.3	20	3398	2784	3730	2817	3730	3045	4084	2860	4084	3089
		15.6	29	3719	2904	4084	2969	4084	3198	4449	3024	4449	3252
		19	38	3940	3013	4339	3078	4339	3306	4737	3132	4737	3361
	0	9	11	2634	2480	2933	2501	2933	2719	3232	2512	3232	2730
		12.3	20	3066	2632	3398	2686	3398	2893	3730	2719	3730	2936
		15.6	29	3342	2730	3719	2795	3719	3024	4084	2860	4084	3078
		19	38	3553	2795	3940	2882	3940	3100	4339	2947	4339	3176
005	5	9	11	2357	2317	2634	2404	2634	2588	2833	2414	2933	2632
		12.3	20	2712	2469	3066	2534	3066	2741	3398	2567	3398	2784
		15.6	29	2977	2545	3342	2621	3342	2839	3719	2686	3719	2893
		19	38	3154	2578	3553	2686	3553	2893	3940	2762	3940	2969
	6	9	11	2059	2023	2357	2317	2357	2317	2634	2327	2634	2545
		12.3	20	2380	2317	2712	2382	2712	2588	3066	2425	3066	2643
		15.6	29	2601	2338	2977	2425	2977	2643	3342	2501	3342	2708
		19	38	2756	2360	3154	2469	3154	2686	3553	2567	3553	2773
	8	11.5	17	4071	3384	4404	3405	4404	3670	4748	3432	4748	3681
		13.8	24	4533	3624	4907	3667	4907	3938	5287	3700	5287	3964
		17	34	4854	3785	5265	3844	5265	4119	5671	3887	5671	4163
		21	45	5109	3913	5530	3967	5530	4253	5962	4021	5962	4296
	9	11.5	17	3574	3243	4071	3270	4071	3535	4404	3287	4450	3546
		13.8	24	4102	3446	4533	3489	4533	3754	4907	3532	4907	3792
		17	34	4454	3585	4854	3644	4854	3919	5265	3698	5265	3963
		21	45	4682	3681	5109	3751	5109	4027	5530	3811	5530	4086
	11	11.5	17	3389	3102	3728	3140	3728	3394	4071	3156	4071	3416
		13.8	24	3778	3268	4153	3311	4153	3581	4533	3360	4533	3619
		17	34	4053	3369	4454	3439	4454	3704	4854	3499	4854	3763
		21	45	4256	3454	4682	3530	4682	3795	5109	3595	5109	3859
	13	11.5	17	3051	2972	3389	3005	3389	3264	3728	3021	3728	3281
		13.8	24	3403	3084	3778	3143	3778	3397	4153	3192	4153	3446
		17	34	3647	3164	4053	3240	4053	3499	4454	3310	4454	3563
		21	45	3829	3212	4256	3309	4256	3568	4682	3384	4682	3643
	15	11.5	17	2712	2811	3051	2875	3051	3124	3343	2897	3389	3156
		13.8	24	3018	2906	3403	2965	3403	3219	3778	3014	3778	3268
		17	34	3247	2953	3647	3034	3647	3288	4053	3110	4053	3353
		21	45	3408	2975	3829	3082	3829	3331	4256	3174	4256	3411
	17	11.5	17	2374	2465	2712	2756	2712	2817	3051	2777	3051	3037
		13.8	24	2644	2722	3018	2792	3018	3035	3403	2852	3403	3095
		17	34	2841	2760	3247	2819	3247	3072	3647	2905	3647	3148
		21	45	2976	2782	3408	2851	3408	3093	3829	2953	3829	3190

Note: 1. TH-Total Heating, SH-Sensibe Heating
2. Data in table is the capacity at high speed. To calculate capacity at medium or low speed refer to the capacity Multiplier vs Speed table (Page13).

PERFORMANCE DATA

3R COOLING CAPACITY

(W)

SIZE	WATER IN TEMP °C	WATER FLOW l/min	WATER DROP kpa	ENTERING WATER TEMPERATURE°C 19.5WB 27.0DB T.H	19.5WB 27.0DB S.H	20.0WB 27.0DB T.H	20.0WB 27.0DB S.H	20.0WB 28.0DB T.H	20.0WB 28.0DB S.H	21.0WB 28.0DB T.H	21.0WB 28.0DB S.H	21.0WB 29.0DB T.H	21.0WB 29.0DB S.H	22.0WB 30.0DB T.H	22.0WB 30.0DB S.H
004	5	9	11	4261	2947	4405	2849	4405	3045	4693	2860	4693	3056	4992	3045
		12.3	20	4925	3274	5102	3176	5102	3404	5434	3198	5434	3415	5777	3426
		15.6	29	5379	3502	5578	3404	5578	3633	5943	3426	5943	3654	6320	3665
		19	38	5711	3654	5921	3556	5921	3796	6309	3589	6309	3817	6707	3850
	6	9	11	3962	2839	4117	2730	4117	2947	4405	2721	4405	2947	4693	2947
		12.3	20	4582	3132	4759	3034	4759	3252	5102	3056	5102	3274	5434	3285
		15.6	29	5025	3328	5202	3241	5202	3448	5578	3263	5578	3491	5943	3502
		19	38	5324	3469	5523	3372	5523	3600	5921	3415	5921	3643	6309	3665
	7	9	11	3663	2730	3818	2632	3818	2839	4117	2643	4117	2849	4405	2849
		12.3	20	4250	2980	4416	2893	4416	3111	4759	2926	4759	3121	5102	3154
		15.6	29	4648	3165	4826	3078	4826	3285	5202	3111	5202	3328	5578	3350
		19	38	4925	3274	5124	3198	5124	3415	5523	3241	5523	3448	5921	3491
	8	9	11	3387	2632	3531	2534	3531	2730	3818	2545	3818	2741	4117	2741
		12.3	20	3918	2849	4084	2762	4084	2958	4416	2784	4416	2981	4759	3013
		15.6	29	4272	2980	4449	2904	4449	3121	4826	2947	4826	3165	5202	3187
		19	38	4527	3089	4737	3013	4737	3230	5124	3056	5124	3274	5523	3317
	9	9	11	3088	2534	3232	2425	3232	2643	3531	2436	3531	2643	3818	2643
		12.3	20	3564	2697	3730	2621	3730	2817	4084	2643	4084	2849	4416	2871
		15.6	29	3896	2817	4084	2730	4084	2947	4449	2784	4449	3002	4826	3024
		19	38	4139	2893	4339	2840	4339	3034	4737	2882	4737	3089	5124	3132
	10	9	11	2789	2436	2933	2338	2933	2545	3232	2349	3232	2545	3531	2556
		12.3	20	3232	2556	3398	2469	3398	2686	3730	2512	3730	2708	4084	2730
		15.6	29	3531	2643	3719	2567	3719	2773	4084	2632	4084	2817	4449	2871
		19	38	3741	2708	3940	2643	3940	2849	4339	2708	4339	2904	4737	2958
005	5	11.5	17	4915	3562	5086	3449	5086	3687	5425	3465	5425	3703	5763	3698
		13.8	24	5475	3846	5667	3732	5667	3991	6042	3754	6042	4008	6422	4018
		17	34	5869	4044	6077	3930	6077	4195	6483	3963	6483	4216	6894	4238
		21	45	6170	4189	6383	4070	6383	4339	6810	4107	6810	4366	7236	4399
	6	11.5	17	4576	3427	4748	3308	4748	3557	5086	3315	5086	3562	5425	3562
		13.8	24	5095	3678	5287	3559	5287	3819	5667	3592	5667	3846	6042	3856
		17	34	5473	3849	5671	3741	5671	3990	6077	3774	6077	4033	6483	4049
		21	45	5743	3978	5962	3865	5962	4129	6383	3913	6383	4167	6810	4199
	7	11.5	17	4238	3292	4404	3173	4404	3421	4748	3195	4748	3432	5086	3438
		13.8	24	4720	3500	4907	3397	4907	3651	5287	3430	5287	3667	5667	3694
		17	34	5068	3655	5265	3558	5265	3801	5671	3590	5671	3844	6077	3871
		21	45	5317	3757	5530	3665	5530	3919	5962	3713	5962	3957	6383	4000
	8	11.5	17	3899	3162	4071	3048	4071	3286	4404	3065	4404	3302	4748	3302
		13.8	24	4345	3338	4533	3235	4533	3479	4907	3268	4907	3501	5287	3532
		17	34	4657	3456	4854	3364	4854	3606	5265	3412	5265	3655	5671	3688
		21	45	4890	3546	5109	3454	5109	3758	5530	3509	5530	3751	5962	3800
	9	11.5	17	3561	3037	3728	2913	3728	3167	4071	2935	4071	3172	4404	3178
		13.8	24	3966	3165	4153	3073	4153	3311	4533	3100	4533	3343	4907	3376
		17	34	4251	3261	4454	3203	4454	3418	4854	3223	4854	3466	5265	3504
		21	45	4469	3325	4682	3255	4682	3493	5109	3309	5109	3546	5530	3595
	10	11.5	17	3217	2913	3389	2794	3389	3042	3728	2821	3728	3053	4071	3070
		13.8	24	3591	2998	3778	2906	3778	3149	4153	2949	4153	3181	4533	3208
		17	34	3850	3061	4053	2975	4053	3218	4454	3045	4454	3272	4854	3320
		21	45	4037	3115	4256	3039	4256	3271	4682	3109	4682	3336	5109	3401

Note: 1. TH-Total Heating, SH-Sensibe Heating
2. Data in table is the capacity at high speed. To calculate capacity at medium or low speed refer to the capacity Multiplier vs Speed table (Page13).

3R COOLING CAPACITY

(W)

SIZE	WATER IN TEMP °C	WATER FLOW l/min	WATER DROP kpa	ENTERING WATER TEMPERATURE°C 17.0WB 24.0DB T.H	S.H	18.0WB 25.0DB T.H	S.H	26.0DB T.H	S.H	19.0WB 26.0DB T.H	S.H	27.0DB T.H	S.H
006	5	13.5	25	5223	4065	5652	4087	5652	4406	6092	4120	6092	4417
		17	35	5663	4263	6137	4318	6137	4638	6611	4351	6611	4660
		20	42	5990	4406	6498	4473	6498	4792	6994	4528	6994	4847
		24	52	6250	4528	6769	4583	6769	4924	7299	4649	7299	4968
	6	13.5	25	4783	3878	5223	3922	5223	4230	5652	3944	5652	4252
		17	35	5201	4054	5663	4109	5663	4417	6137	4153	6137	4461
		20	42	5494	4175	5990	4241	5990	4561	6498	4307	6498	4616
		24	52	5731	4263	6250	4340	6250	4660	6769	4406	6769	4726
	7	13.5	25	4354	3712	4783	3756	4783	4065	5223	3779	5223	4087
		17	35	4727	3845	5201	3900	5201	4219	5663	3955	5663	4252
		20	42	4998	3933	5494	4010	5494	4318	5990	4076	5990	4384
		24	52	5212	3999	5731	4087	5731	4395	6250	4164	6250	4473
	8	13.5	25	3926	3547	4354	3591	4354	3900	4783	3613	4783	3922
		17	35	4253	3624	4727	3690	4727	3999	5201	3756	5201	4054
		20	42	4501	3690	4998	3779	4998	4076	5494	3856	5494	4153
		24	52	4682	3723	5212	3834	5212	4142	5731	3922	5731	4219
	9	13.5	25	3475	3382	3926	3426	3926	3745	4354	3459	4354	3767
		17	35	3779	3426	4253	3481	4253	3790	4727	3547	4727	3845
		20	42	4005	3448	4501	3536	4501	3834	4998	3624	4998	3911
		24	52	4174	3459	4682	3569	4682	3867	5212	3679	5212	3955
	10	13.5	25	3046	2974	3475	3272	3475	3393	3926	3305	3926	3613
		17	35	3305	3206	3779	3283	3779	3569	4253	3360	4253	3635
		20	42	3508	3261	4005	3294	4005	3591	4501	3393	4501	3679
		24	52	3644	3283	4174	3316	4174	3591	4682	3426	4682	3701
008	5	16	22	6993	5713	7577	5768	7577	6216	8171	5801	8171	6238
		23.5	35	7821	6128	8468	6205	8468	6653	9116	6260	9116	6707
		29	50	8352	6369	9041	6467	9041	6926	9752	6555	9752	7002
		35	65	8723	6511	9455	6642	9455	7101	10177	6729	10177	7188
	6	16	22	6420	5473	6993	5528	6993	5976	7577	5560	7577	5997
		23.5	35	7174	5790	7821	5877	7821	6336	8468	5954	8468	6402
		29	50	7651	5997	8352	6107	8352	6555	9041	6216	9041	6642
		35	65	8001	6128	8723	6260	8723	6707	9455	6369	9455	6806
	7	16	22	5837	5233	6420	5287	6420	5735	6993	5331	6993	5757
		23.5	35	6516	5473	7174	5582	7174	6008	7821	5670	7821	6085
		29	50	6961	5626	7651	5757	7651	6183	8352	5866	8352	6292
		35	65	7269	5735	8001	5866	8001	6303	8723	5997	8723	6423
	8	16	22	5242	4992	5837	5047	5837	5484	6420	5091	6420	5528
		23.5	35	5858	5156	6516	5255	6516	5692	7174	5364	7174	5779
		29	50	6272	5244	6961	5397	6961	5823	7651	5517	7651	5932
		35	65	6537	5309	7269	5473	7269	5899	8001	5626	8001	6030
	9	16	22	4669	4763	5242	4829	5242	5255	5837	4883	5837	5298
		23.5	35	5210	4829	5858	4938	5858	5364	6516	5058	6516	5462
		29	50	5571	4861	6272	5036	6272	5440	6961	5167	6961	5582
		35	65	5815	4894	6537	5080	6537	5484	7269	5244	7269	5637
	10	16	22	4086	4206	4669	4599	4669	4807	5242	4654	5242	5080
		23.5	35	4563	4381	5210	4621	5210	5036	5858	4752	5858	5145
		29	50	4871	4457	5571	4665	5571	5047	6272	4818	6272	5211
		35	65	5083	4468	5815	4676	5815	5058	6537	4861	6537	5233

Note: 1. TH-Total Heating, SH-Sensibe Heating
2. Data in table is the capacity at high speed. To calculate capacity at medium or low speed refer to the capacity Multiplier vs Speed table (Page13).

3R COOLING CAPACITY

(W

SIZE	WATER IN TEMP °C	WATER FLOW l/min	WATER DROP kpa	ENTERING WATER TEMPERATURE°C 19.5WB 27.0DB T.H	S.H	20.0WB 27.0DB T.H	S.H	20.0WB 28.0DB T.H	S.H	21.0WB 28.0DB T.H	S.H	21.0WB 29.0DB T.H	S.H	22.0WB 30.0DB T.H	S.H
006	5	13.5	25	6306	4274	6532	4142	6532	4428	6972	4164	6972	4450	7400	4450
		17	35	6848	4528	7085	4395	7085	4693	7558	4417	7558	4715	8032	4726
		20	42	7242	4704	7491	4572	7491	4880	7998	4616	7998	4902	8506	4935
		24	52	7558	4847	7807	4704	7807	5012	8337	4748	8337	5045	8856	5078
	6	13.5	25	5877	4109	6092	3977	6092	4263	6532	3999	6532	4274	6972	4274
		17	35	6374	4329	6611	4186	6611	4495	7085	4230	7085	4528	7558	4539
		20	42	6746	4484	6994	4351	6994	4649	7491	4395	7491	4693	7998	4715
		24	52	7028	4605	7299	4473	7299	4781	7807	4528	7807	4814	8337	4858
	7	13.5	25	5449	3944	5652	3801	5652	4098	6092	3834	6092	4109	6532	4120
		17	35	5900	4120	6137	3999	6137	4296	6611	4032	6611	4318	7085	4340
		20	42	6250	4252	6498	4142	6498	4428	6994	4175	6994	4473	7491	4506
		24	52	6509	4351	6769	4241	6769	4539	7299	4296	7299	4583	7807	4627
	8	13.5	25	4998	3779	5223	3646	5223	3933	5652	3668	5652	3955	6092	3955
		17	35	5426	3922	5663	3801	5663	4098	6137	3845	6137	4120	6611	4153
		20	42	5742	4032	5990	3922	5990	4197	6498	3977	6498	4252	6994	4296
		24	52	5990	4109	6250	3999	6250	4395	6769	4065	6769	4340	7299	4395
	9	13.5	25	4569	3624	4783	3481	4783	3779	5223	3514	5223	3790	5652	3801
		17	35	4964	3723	5201	3613	5201	3900	5663	3646	5663	3933	6137	3977
		20	42	5246	3801	5494	3767	5494	3988	5990	3756	5990	4032	6498	4087
		24	52	5471	3856	5731	3767	5731	4054	6250	3834	6250	4109	6769	4164
	10	13.5	25	4129	3470	4354	3327	4354	3624	4783	3371	4783	3646	5223	3668
		17	35	4490	3525	4727	3426	4727	3701	5201	3470	5201	3745	5663	3779
		20	42	4749	3569	4998	3470	4998	3756	5494	3547	5494	3823	5990	3867
		24	52	4941	3613	5212	3525	5212	3790	5731	3602	5731	3867	6250	3944
009	5	16	22	8458	6052	8755	5844	8755	6260	9328	5866	9328	6281	9912	6281
		23.5	35	9455	6522	9774	6325	9774	6762	10432	6369	10432	6784	11079	6806
		29	50	10092	6806	10442	6620	10442	7068	11143	6686	11143	7112	11832	7155
		35	65	10538	7002	10909	6828	10909	7265	11641	6904	11641	7330	12363	7374
	6	16	22	7874	5790	8171	5604	8171	6019	8755	5626	8755	6030	9328	6052
		23.5	35	8797	6216	9116	6019	9116	6456	9774	6085	9774	6489	10432	6533
		29	50	9392	6467	9752	6292	9752	6718	10442	6369	10442	6784	11143	6828
		35	65	9816	6631	10177	6467	10177	6904	10909	6555	10909	6970	11641	7024
	7	16	22	7290	5560	7577	5375	7577	5779	8171	5397	8171	5801	8755	5826
		23.5	35	8150	5910	8468	5735	8468	6150	9116	5790	9116	6205	9774	6238
		29	50	8702	6128	9041	5954	9041	6380	9752	6052	9752	6456	10442	6500
		35	65	9084	6260	9455	6107	9455	6533	10177	6216	10177	6620	10909	6686
	8	16	22	6707	5331	6993	5145	6993	5550	7577	5167	7577	5582	8171	5593
		23.5	35	7492	5604	7821	5440	7821	5844	8468	5517	8468	5910	9116	5954
		29	50	8012	5779	8352	5626	8352	6030	9041	5713	9041	6128	9752	6183
		35	65	8373	5899	8723	5757	8723	6150	9455	5855	9455	6249	10177	6336
	9	16	22	6123	5440	6420	4916	6420	5320	6993	4960	6993	5353	7577	5375
		23.5	35	6834	5309	7174	5145	7174	5550	7821	5222	7821	5615	8468	5681
		29	50	7301	5440	7651	5298	7651	5692	8352	5397	8352	5779	9041	5866
		35	65	7641	5517	8001	5386	8001	5779	8723	5517	8723	5899	9455	5997
	10	16	22	5539	4894	5837	4697	5837	5113	6420	4741	6420	5134	6993	5156
		23.5	35	6197	5003	6516	4850	6516	5244	7174	4938	7174	5320	7821	5386
		29	50	6611	5080	6961	4960	6961	5331	7651	5069	7651	5451	8352	5539
		35	65	6908	5134	7269	5014	7269	5397	8001	5156	8001	5528	8723	5637

Note: 1. TH-Total Heating, SH-Sensibe Heating
2. Data in table is the capacity at high speed. To calculate capacity at medium or low speed refer to the capacity Multiplier vs Speed table (Page13).

PERFORMANCE DATA

3R COOLING CAPACITY

(W)

SIZE	WATER IN TEMP °C	WATER FLOW l/min	WATER DROP kpa	ENTERING WATER TEMPERATURE°C 17.0WB 24.0DB T.H	S.H	18.0WB 25.0DB T.H	S.H	26.0DB T.H	S.H	19.0WB 26.0DB T.H	S.H	27.0DB T.H	S.H
010	5	22	31	8484	7018	9189	7086	9189	7640	9905	7131	9905	7663
		27	40	9080	7210	9829	7301	9829	7822	10577	7357	10577	7889
		35	60	9438	7290	10219	7403	10219	7935	11022	7505	11022	8025
		42	82	9699	7335	10512	7482	10512	7991	11315	7573	11315	8093
	6	22	31	7789	6724	8484	6792	8484	7346	9189	6837	9189	7369
		27	40	8332	6814	9080	6916	9080	7459	9829	7007	9829	7527
		35	60	8646	6871	9438	6995	9438	7505	10219	7120	10219	7607
		42	82	8896	6905	9688	7052	9688	7550	10512	7176	10512	7663
	7	22	31	7073	6429	7778	6497	7778	7041	8473	6543	8473	7075
		27	40	7561	6452	8321	6565	8321	7075	9069	6667	9069	7154
		35	60	7854	6509	8636	6588	8636	7131	9427	6712	9427	7199
		42	82	8061	6554	8874	6610	8874	7154	9677	6735	9677	7222
	8	22	31	6357	6135	7073	6203	7073	6735	7778	6260	7778	6792
		27	40	6802	6180	7561	6248	7561	6769	8332	6305	8332	6837
		35	60	7084	6203	7865	6293	7865	6792	8646	6327	8646	6882
		42	82	7269	6226	8082	6316	8082	6814	8896	6350	7811	6905
	9	22	31	5164	5343	5804	5422	5804	5897	6466	5479	6466	5943
		27	40	6054	5682	6802	5807	6802	6316	7572	5954	7572	6429
		35	60	6292	5705	7084	5829	7084	6339	7865	5977	7865	6452
		42	82	6466	5716	7269	5841	7269	6361	8082	5999	8082	6463
	10	22	31	4958	4958	5663	5207	5663	5614	6357	5399	6357	5795
		27	40	5294	4992	6043	5229	6043	5660	6791	5433	6791	5841
		35	60	5511	5014	6303	5252	6303	5682	7095	5456	7095	5863
		42	82	5641	5026	6466	5263	6466	5694	7269	5479	7269	5886
012	5	27	32	10492	8325	11367	8404	11367	9044	12232	8471	12232	9089
		33	40	11135	8572	12065	8684	12065	9314	12985	8786	12985	9403
		40	60	11600	8684	12564	8887	12564	9516	13528	8988	13528	9617
		47	82	11932	8875	12941	9010	12941	9639	13927	9145	13927	9763
	6	27	32	9617	7932	10492	8022	10492	8651	11367	8100	11367	8718
		33	40	10204	8123	11135	8246	11135	8875	12065	8359	12065	8999
		40	60	10625	8258	11600	8404	11600	9010	12564	8527	12564	9134
		47	82	10935	8336	11932	8505	11932	9123	12941	8651	12941	9246
	7	27	32	8742	7539	9617	7640	9617	8269	10492	7718	10492	8336
		33	40	9273	7673	10204	7808	10204	8426	11135	7932	11135	8527
		40	60	9661	7752	10625	7920	10625	8516	11600	8067	11600	8662
		47	82	9949	7808	10935	7999	10935	8595	11932	8168	11932	8741
	8	27	32	7855	7157	8742	7269	8742	7887	9617	7359	9617	7954
		33	40	8354	7213	9273	7370	9273	7965	10204	7505	10204	8089
		40	60	8697	7246	9661	7437	9661	8022	10625	7606	10625	8179
		47	82	8952	7269	9949	7471	9949	8067	10935	7673	10935	8235
	9	27	32	6980	6718	7855	6898	7855	7516	8742	6999	8742	7595
		33	40	7423	6730	8354	6921	8354	7583	9273	7078	9273	7662
		40	60	7733	6752	8697	6943	8697	7628	9661	7134	9661	7685
		47	82	7966	6786	8952	6954	8952	7673	9949	7157	9949	7707
	10	27	32	6116	6202	6980	6415	6980	6954	7855	6651	7855	7168
		33	40	6492	6269	7423	6438	7423	6988	8354	6741	8354	7190
		40	60	6769	6303	7733	6482	7733	7044	8697	6797	8697	7213
		47	82	6958	6449	7966	6539	7966	7078	8952	6842	8952	7235

Note: 1. TH-Total Heating, SH-Sensibe Heating
2. Data in table is the capacity at high speed. To calculate capacity at medium or low speed refer to the capacity Multiplier vs Speed table (Page13).

PERFORMANCE DATA

3R COOLING CAPACITY

(W)

SIZE	WATER IN TEMP °C	WATER FLOW l/min	WATER DROP kpa	ENTERING WATER TEMPERATURE°C 19.5WB 27.0DB T.H	19.5WB 27.0DB S.H	20.0WB 27.0DB T.H	20.0WB 27.0DB S.H	20.0WB 28.0DB T.H	20.0WB 28.0DB S.H	21.0WB 28.0DB T.H	21.0WB 28.0DB S.H	21.0WB 29.0DB T.H	21.0WB 29.0DB S.H	22.0WB 30.0DB T.H	22.0WB 30.0DB S.H
010	5	22	31	10263	7437	10621	7188	10621	7697	11315	7210	11315	7720	12020	7720
		27	40	10979	7674	11348	7437	11348	7957	12107	7493	12107	7980	12856	8003
		35	60	11413	7799	11803	7584	11803	8093	12595	7652	12595	8150	13376	8195
		42	82	11803	7889	12129	7686	12129	8184	12942	7776	12942	8252	13745	8308
	6	22	31	9558	7120	9916	6893	9916	7403	10621	6916	10621	7414	11315	7437
		27	40	10219	7312	10588	7086	10588	7595	11348	7154	11348	7629	12118	7686
		35	60	10621	7403	11022	7210	11022	7697	11803	7290	11803	7765	12595	7822
		42	82	10914	7471	11304	7278	11304	7776	12129	7380	12129	7844	12942	7912
	7	22	31	8842	6825	9189	6599	9189	7097	9905	6633	9905	7120	10610	7154
		27	40	9460	6950	9829	6746	9829	7233	10577	6803	10577	7290	11337	7335
		35	60	9829	7007	10209	6814	10209	7301	11011	6927	11011	7380	11792	7437
		42	82	10078	7029	10480	6859	10480	7335	11283	6984	11283	7437	12096	7516
	8	22	31	8136	6554	8484	6316	8484	6814	9189	6350	9189	6859	9905	6871
		27	40	8701	6588	9080	6395	9080	6871	9829	6486	9829	6950	10577	7007
		35	60	9059	6622	9438	6441	9438	6905	10219	6543	10219	7018	11022	7075
		42	82	9308	6644	9688	6486	9688	6927	10501	6588	10501	7041	11304	7131
	9	22	31	6780	6101	7106	5512	7106	5965	7746	5569	7746	6011	8386	6033
		27	40	7941	6248	8332	6056	8332	6531	9080	6146	9080	6610	9840	6690
		35	60	8256	6271	8646	6078	8646	6554	9438	6180	9438	6622	10219	6724
		42	82	8494	6293	8896	6090	8896	6565	9699	6214	9699	6644	10512	6758
	10	22	31	6726	5795	7084	5569	7084	6011	7789	5716	7789	6124	8484	6271
		27	40	7193	5818	7561	5603	7561	6044	8321	5761	8321	6169	9069	6305
		35	60	7486	5829	7876	5626	7876	6067	8657	5784	8657	6203	9449	6327
		42	82	7681	5841	8082	5648	8082	6078	8896	5807	8896	6226	9699	6350
012	5	27	32	12664	8808	13107	8527	13107	9134	13982	8572	13982	9156	14857	9168
		33	40	13450	9193	13916	8864	13916	9460	14846	9066	14846	9066	15777	9550
		40	60	14004	9359	14492	9089	14492	9696	15467	9168	15467	9763	16431	9808
		47	82	14414	9516	14924	9246	14924	9853	15910	9347	15910	9932	16907	9999
	6	27	32	11788	8426	12232	8168	12232	8752	13107	8224	13107	8797	13982	8808
		33	40	12520	8707	12985	8437	12985	9044	13916	8516	13916	9089	14846	9145
		40	60	13040	8887	13528	8640	13528	9235	14492	8729	14492	9314	15467	9370
		47	82	13428	9010	13927	8786	13927	9370	14924	8887	14924	9460	15910	9538
	7	27	32	10924	8067	11367	7673	11367	8392	12232	7853	12232	8426	13107	8471
		33	40	11600	8280	12065	8033	12065	8628	12985	8111	12985	8684	13916	8741
		40	60	12076	8426	12564	8190	12564	8763	13528	8302	13528	8864	14492	8932
		47	82	12431	8516	12941	8314	12941	8875	13927	8426	13927	8988	14924	9078
	8	27	32	10049	7696	10492	7449	10492	8022	11367	7516	11367	8078	12232	8089
		33	40	10669	7853	11135	7617	11135	8190	12065	7718	12065	8280	12985	8347
		40	60	11113	7954	11600	7729	11600	8314	12564	7864	12564	8505	13927	8628
		47	82	11445	8033	11932	7831	11932	8392	12941	7965	12941	8505	13927	8628
	9	27	32	9174	7348	9617	7100	9617	7673	10492	7157	10492	7718	11367	7774
		33	40	9739	7437	10204	7213	10204	7774	11135	7314	11135	7864	12065	7943
		40	60	10138	7482	10625	7291	10625	7842	11600	7426	11600	7965	12564	8078
		47	82	10448	7527	10935	7348	10935	7876	11932	7505	11932	8033	12941	8156
	10	27	32	8298	6988	8742	6741	8742	7314	9617	6819	10725	7381	10492	7437
		33	40	8808	6999	9273	6797	9273	7348	10204	6909	10204	7460	11135	7550
		40	60	9174	7022	9661	6831	9661	7370	10625	6988	10625	7516	11600	7628
		47	82	9440	7022	9949	6864	9949	7381	10935	7033	10935	7550	11932	7696

Note: 1. TH-Total Heating, SH-Sensibe Heating
2. Data in table is the capacity at high speed. To calculate capacity at medium or low speed refer to the capacity Multiplier vs Speed table (Page13).

PERFORMANCE DATA

3R COOLING CAPACITY

(W)

SIZE	WATER IN TEMP °C	WATER FLOW l/min	WATER DROP kpa	ENTERING WATER TEMPERATURE°C 17.0WB 24.0DB T.H	S.H	18.0WB 25.0DB T.H	S.H	18.0WB 26.0DB T.H	S.H	19.0WB 26.0DB T.H	S.H	19.0WB 27.0DB T.H	S.H
	5	30	32	12017	10038	13023	10123	13023	10906	14017	10207	14017	10954
		37	47	12480	10062	13520	10243	13520	10978	14547	10364	14547	11087
		44	61	12808	10086	13870	10315	13870	11050	14931	10436	14931	11171
		51	76	13023	10195	14118	10339	14118	11062	15191	10496	15191	11207
	6	30	32	11012	9520	12017	9665	12017	10424	13023	9761	13023	10508
		37	47	11407	9544	12447	9701	12447	10436	13497	9833	13497	10580
		44	61	11724	9556	12797	9749	12797	10460	13858	9894	13858	10605
		51	76	11938	9568	13023	9761	13023	10472	14118	9930	14118	10617
	7	30	32	10018	8869	11023	9086	11023	9761	12029	9303	12029	9930
		37	47	10391	8917	11430	9134	11430	9809	12469	9351	12469	9978
		44	61	10662	8942	11724	9158	11724	9845	12797	9363	12797	10014
		51	76	10865	8966	11938	9183	11938	9869	13023	9375	13023	10038
	8	30	32	9002	8206	10018	8460	10018	9134	11023	8713	11023	9351
		37	47	9363	8279	10391	8508	10391	9158	11430	8737	11430	9399
		44	61	9600	8315	10662	8544	10662	9195	11724	8785	11724	9424
		51	76	9770	8339	10854	8568	10854	9255	11927	8809	11927	9448
	9	30	32	7997	7592	9002	7833	9002	8508	10018	8110	10018	8737
		37	47	8324	7652	9363	7917	9363	8568	10391	8158	10391	8797
		44	61	8539	7688	9600	7953	9600	8604	10662	8194	10662	8821
		51	76	8697	7724	9770	7990	9770	8640	10865	8231	10865	8857
	10	30	32	7003	6989	7997	7242	7997	7712	9002	7568	9002	8146
		37	47	7285	7038	8324	7291	8324	7953	9374	7592	9374	8194
		44	61	7477	7050	8539	7351	8539	7990	9600	7628	9600	8231
		51	76	7601	7062	8708	7375	8708	8002	9781	7652	9781	8243

Note: 1. TH-Total Heating, SH-Sensibe Heating
2. Data in table is the capacity at high speed. To calculate capacity at medium or low speed refer to the capacity Multiplier vs Speed table (Page13).

PERFORMANCE DATA

3R COOLING CAPACITY

(W)

SIZE	WATER IN TEMP °C	WATER FLOW l/min	WATER DROP kpa	ENTERING WATER TEMPERATURE°C 19.5WB 27.0DB T.H	19.5WB 27.0DB S.H	20.0WB 27.0DB T.H	20.0WB 27.0DB S.H	20.0WB 28.0DB T.H	20.0WB 28.0DB S.H	21.0WB 28.0DB T.H	21.0WB 28.0DB S.H	21.0WB 29.0DB T.H	21.0WB 29.0DB S.H	22.0WB 30.0DB T.H	22.0WB 30.0DB S.H
014	5	30	32	14513	10617	15022	10279	15022	[illegible]	[illegible]	[illegible]	[illegible]	11038	17021	11050
		37	47	[illegible]	10846	15598	10448	15586	[illegible]	[illegible]	[illegible]	[illegible]	[illegible]	[illegible]	11255
		44	61	15462	10870	15993	10556	15993	11255	17077	10641	17077	11340	18139	11388
		51	76	15733	10918	16287	10617	16287	11316	17360	10725	17360	11400	18455	11484
	6	30	32	13508	10159	14005	9845	14005	10544	15010	9906	15010	10605	16016	10617
		37	47	14005	10243	14525	9930	14525	10641	15564	10014	15564	10689	16603	10761
		44	61	14389	10315	14920	10026	14920	10713	15982	10135	15982	10809	17066	10870
		51	76	14660	10351	15202	10086	15202	10761	16287	10207	16287	10858	17360	10954
	7	30	32	12526	9725	13034	9255	13034	10123	14017	9472	14017	10159	15022	10219
		37	47	13000	9761	13520	9472	13520	10159	14547	9556	14547	10231	15586	10303
		44	61	13328	9773	13858	9508	13858	10171	14920	9640	14920	10291	15993	10364
		51	76	13576	9785	14129	9544	14129	10195	15202	9677	15202	10327	16298	10424
	8	30	32	11520	9122	12029	8917	12029	9556	13023	9062	13023	9665	14017	9761
		37	47	11961	9158	12480	8942	12480	9592	13520	9098	13520	9701	14547	9845
		44	61	12266	9195	12797	8966	12797	9616	13858	9122	13858	9737	14920	9894
		51	76	12492	9219	13023	8990	13023	9640	14118	9146	14118	9761	15191	9906
	9	30	32	10515	8556	10459	8375	10459	8942	12029	8556	12029	9110	13023	9279
		37	47	10922	8580	11441	8411	11441	8990	12480	8592	12480	9158	13531	9327
		44	61	11193	8616	11724	8435	11724	9014	12808	8616	12808	9207	13870	9351
		51	76	11407	8652	11938	8447	11938	9050	13023	8628	13023	9231	14129	9375
	10	30	32	9510	7953	10018	7797	10018	8387	11012	7990	11012	8592	12017	8893
		37	47	9883	8014	10402	7833	10402	8435	11441	8038	11441	8616	12492	8797
		44	61	10131	8050	10673	7869	10673	8460	11735	8074	11735	8652	12808	8833
		51	76	10312	8074	10865	7893	10865	8484	11950	8086	11950	8676	13034	8845

Note: 1. TH-Total Heating, SH-Sensibe Heating
2. Data in table is the capacity at high speed. To calculate capacity at medium or low speed refer to the capacity Multiplier vs Speed table (Page13).

PERFORMANCE DATA

1R HEATING CAPACITY

SIZE	WATER FLOW l/min	WATER DROP kpa	ENTERING WATER TEMPERATURE °C 21.0DB WATER IN TEMP °C								
			40	45	50	55	60	65	70	75	80
002	4	5	1055	1403	1714	2036	2371	2695	3030	3365	3413
	6	10	1118	1502	1838	2186	2534	2893	3240	3601	3961
	8	17	1167	1552	1912	2272	2633	3005	3365	3738	4111
	10	25	1204	1590	1950	2334	2707	3079	3452	3837	4222
003	4	8	1316	1740	2151	2562	2974	3397	3821	4232	4667
	6	17	1399	1881	2316	2762	3209	3656	4114	4561	5019
	8	29	1470	1940	2422	2880	3351	3841	4291	4761	5231
	10	44	1505	1998	2468	2963	3445	3926	4408	4890	5383
004	4	12	1529	2038	2537	3024	3523	4021	4531	5030	5539
	6	25	1631	2220	2741	3273	3817	4350	4893	5437	5981
	8	41	1710	2277	2865	3421	3976	4543	5108	5686	6253
	10	62	1767	2356	2922	3523	4100	4678	5267	5856	6434
005	4	12	1934	2551	3210	3752	4363	4975	5587	6205	6822
	6	25	2067	2771	3417	4063	4727	5379	6043	6707	7376
	8	41	2171	2858	3573	4254	4935	5628	6320	7018	7717
	10	62	2240	2956	3654	4381	5091	5795	6516	7238	7948
006	8	5	2326	3047	3861	4454	5175	5896	6606	7339	8060
	12	10	2489	3303	4070	4826	5606	6373	7152	7932	8722
	16	16	2617	3419	4256	5059	5862	6676	7490	8304	9129
	20	24	2698	3536	4361	5210	6048	6873	7722	8571	9409
008	8	10	2941	3884	4827	5758	6701	7655	8608	9563	10517
	12	20	3135	4225	5225	6235	7258	8279	9313	10347	11380
	16	35	3305	4361	5475	6530	7598	8666	9744	10823	11914
	20	52	3407	4509	5588	6734	7825	8927	10040	11153	12277
010	10	15	3288	4351	5402	6453	7505	8579	9631	10716	11623
	14	28	3509	4727	5856	6985	8136	9277	10439	11512	12730
	18	44	3653	4837	6077	7251	8502	9619	10826	12010	13229
	22	58	3764	4981	6199	7472	8679	9909	11070	12376	13616
012	8	17	3955	5300	6622	7968	9301	10646	12003	13359	14715
	12	36	4184	5760	7197	8646	10094	11554	13014	14486	15957
	16	60	4415	5932	7542	9059	10577	12106	13635	15176	16612
	20	90	4576	6139	7680	9347	10911	12485	14072	15658	17257
014	10	25	4594	6164	7699	9188	10816	12258	13840	15386	16863
	14	47	4815	6629	8292	9955	11630	13305	15003	16689	18387
	18	68	5082	6838	8688	10444	12095	13956	15724	17445	19155
	22	98	5268	7071	8850	10758	12560	14375	15038	18026	19900

Heating capacity correction:
Heating capacities are rated at high fan seen and 21°C DB indoor entering air temperature.
For capacities at medium and low speeds, refer to the capacity Multiplier VS speed table(Page 13)
For correted capacityies at entering air temperature other than 21°C DB,see the example below:

Given:Unit size……006
Water flow……18 l/min
Ent water temp…… 60°C
Ent air temp……18°CDB

From heating capacity table, unit 006 provides 8980W of heating when operating at 60°C entering water,171 l/min flow and 21°C DB entering air temperature Calculate capacity per 1 deg. C as follow:

8980/(60-21)=230W/°C

Corrected capacity at 18°C DB entering air temperature will be:
Corrected capacity=230 × (60-18)=9660W

PERFORMANCE DATA

2R HEATING CAPACITY

SIZE	WATER FLOW l/min	WATER DROP kpa	ENTERING WATER TEMPERATURE °C 21.0DB WATER IN TEMP °C								
			40	45	50	55	60	65	70	75	80
002	5	7	1591	2007	2434	2840	3267	3684	4111	4516	4943
	6	10	1687	2135	2584	3032	3481	3929	4367	4815	5264
	7.5	14	1762	2221	2691	3150	3630	4089	4548	5018	5477
	9	19	1815	2296	2765	3257	3726	4207	4677	5168	5637
003	6	9	2173	2749	3315	3891	4468	5044	5610	6186	6752
	8	16	2294	2891	3487	4104	4700	5306	5913	6509	7116
	10	25	2375	3002	3618	4245	4862	5488	6125	6752	7368
	12	34	2436	3083	3720	4356	4993	5640	6277	6914	7560
004	8	19	2844	3594	4354	5094	5844	6594	7344	8084	8844
	11	26	3039	3828	4636	5425	6233	7032	7831	8629	9428
	14	31	3156	4003	4841	5668	6506	7324	8464	8990	9827
	17	37	3263	4120	4987	5844	6691	7558	8415	9272	10139
005	11	13	3474	4387	5309	6218	7141	8054	8967	9880	10798
	14	16	3652	4614	5582	6534	7502	8464	9427	10384	11352
	17	25	3775	4777	5780	6772	7769	8756	9905	10746	11753
	20	37	3884	4901	5933	6950	7967	8989	10016	11033	12060
006	12	15	4080	5150	6230	7300	8390	9460	10530	11610	12680
	15	22	4240	5370	6490	7600	8720	9840	10960	12070	13200
	18	32	4370	5520	6680	7830	8980	10130	11280	12430	13600
	21	45	4480	5650	6840	8010	9190	10360	11550	12720	13900
008	15	15	5762	7275	8789	10313	11826	13350	14854	16377	17891
	21	28	6084	7686	8936	10889	12490	14092	15693	17295	18896
	27	42	6299	7969	9629	11289	12949	14609	16279	17930	19590
	32	61	6475	8174	9873	11582	13291	14990	16699	18398	20107
010	19	28	6663	8414	9594	11936	13687	15448	17190	18951	20702
	25	38	6729	8509	9890	12060	13830	15601	17381	19151	20921
	31	58	6796	8595	10385	12174	13973	15762	17561	19341	21131
	37	78	6863	8662	10470	12279	14087	15896	17704	19513	21321
012	24	14	8126	10271	12406	14541	16667	18812	20947	23082	25228
	30	22	8403	10607	12821	15036	17250	19454	21669	23883	26088
	36	33	8610	10874	13138	15401	17675	19939	22203	24476	26740
	42	45	8768	11082	13395	15708	18011	20324	22628	24970	27244
014	27	18	9240	11680	14110	16540	18960	21400	23830	26260	28710
	33	27	9350	11800	14260	16730	19190	21640	24110	26570	29020
	39	39	9430	11910	14390	16870	19370	21850	24330	26820	29300
	45	52	9600	12140	14670	17210	19730	22270	24790	27360	29850

Heating capacity correction:
Heating capacities are rated at high fan seen and 21°C DB indoor entering air temperature.
For capacities at medium and low speeds, refer to the capacity Multiplier VS speed table(Page 13)

PERFORMANCE DATA

3R HEATING CAPACITY

SIZE	WATER FLOW l/min	WATER DROP kpa	ENTERING WATER TEMPERATURE °C 21.0DB WATER IN TEMP °C								
			40	45	50	55	60	65	70	75	80
002	5	10	1785	2252	2731	3186	3666	4133	4612	5067	5546
	6.6	14	1893	2396	2899	3402	3905	4408	4899	5403	5906
	8.4	19	1977	2492	3019	3534	4073	4588	5103	5630	6145
	10	25	2036	2576	3103	3654	4181	4720	5247	5798	6325
003	7	15	2466	3120	3762	4416	5070	5723	6366	7019	7662
	9	25	2604	3280	3957	4657	5333	6022	6710	7386	8075
	11	34	2695	3406	4106	4817	5517	6228	6951	7662	8361
	13.6	42	2764	3498	4221	4943	5666	6400	7123	7845	8579
004	9	11	3232	4084	4947	5788	6641	7493	8345	9186	10049
	12.3	20	3453	4350	5268	6165	7083	7991	8898	9806	10714
	15.6	29	3586	4549	5501	6441	7393	8323	9618	10215	11167
	19	38	3708	4682	5667	6641	7604	8589	9562	10536	11521
005	11.5	17	3643	4601	5569	6522	7490	8447	9405	10363	11326
	13.8	24	3830	4840	5855	6854	7868	8878	9888	10892	11907
	17	34	3960	5011	6062	7103	8149	9184	10389	11271	12327
	21	45	4074	5141	6223	7290	8357	9428	10506	11572	12649
006	13.5	25	4603	5810	7028	8235	9465	10672	11879	13097	14304
	17	35	4783	6058	7321	8574	9837	11101	12364	13616	14891
	20	42	4930	6227	7536	8833	10130	11428	12725	14022	15342
	24	52	5054	6374	7716	9036	10367	11687	13030	14350	15681
008	16	22	6261	7906	9551	11206	12851	14507	16141	17796	19441
	23.5	35	6611	8352	9710	11832	13573	15313	17053	18794	20534
	29	50	6845	8659	10463	12267	14071	15876	17690	19484	21288
	35	65	7036	8882	10729	12586	14443	16289	18146	19993	21850
010	22	31	7461	9422	10744	13366	15327	17299	19249	21221	23182
	27	40	7536	9529	11074	13504	15487	17469	19462	21445	23427
	35	60	7610	9625	11628	13632	15647	17650	19665	21658	23662
	42	82	7685	9699	11724	13749	15775	17800	19825	21850	23875
012	27	32	8782	11101	13408	15716	18013	20331	22639	24947	27265
	33	40	9081	11464	13857	16250	18643	21026	23419	25812	28195
	40	60	9306	11752	14199	16645	19103	21549	23996	26453	28900
	47	82	9477	11977	14477	16977	19466	21966	24455	26987	29445
014	30	32	10253	12961	15657	18354	21039	23747	26443	29140	31858
	37	47	10375	13094	15824	18565	21294	24013	26754	29484	32202
	44	61	10464	13216	15968	18720	21494	24246	26998	29761	32513
	51	76	10653	13471	16279	19097	21893	24712	27508	30360	33123

Heating capacity correction:
Heating capacities are rated at high fan seen and 21°C DB indoor entering air temperature.
For capacities at medium and low speeds, refer to the capacity Multiplier VS speed table(Page 13)

NOISE TESTING

Background Noise<20dB(A)

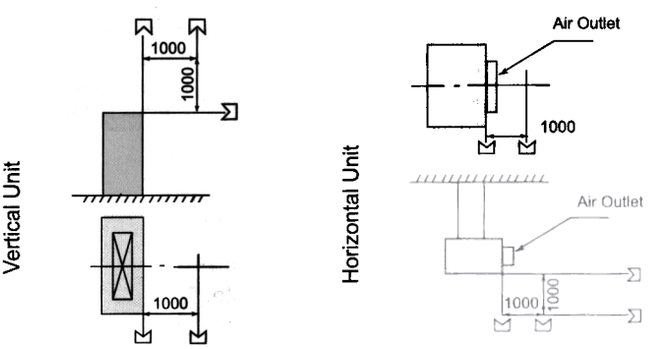

SELECTION PROCEDURE

Select a unit for cooling by matching design sensible heat cooling load to unit sensible heat cooling capacity. The coil, in most cases, will have sufficient latent capacity to meet design requirements. If outside air is used, adjust load and entering coil conditions accordingly.

$$\text{Water temperatur rise}(^\circ C) = \frac{\text{Total heat capacity(w)} \times 0.86}{60 \times \text{Water flow rate(l/min)}} \qquad \text{Air temperature rise}(^\circ Cdb) = \frac{\text{Sensible heat capacity(w)} \times 0.86}{0.29 \times \text{Air quantity}(m^3/h)}$$

EXAMPLES

- **Selection at high fan speed (cooling)**

  Units are usually selected for cooling at high fan speed to ensure use of the smalest size unit.

  1. **Determine job requirements** (see Selection Guidelines)

     Given: Room sensible heat cooling load ·····2330w Room total heat cooling load·····3140w
     Entering air temperature·····27°Cdb,19.5°Cwb Entering water temperature·····7°C
     Air Quantity·····660m³/h

  2. **Determine unit size, water flow and pressure drop**

     Enter Cooling Capacities table at entering air and water temperature of 19.5°C wb and 7°C, Find sensible heat cooling capacity equal to or greater than that required. Read 2510w sensible heat cooling capacity; 3224w total heat cooling capacity. Read left to select a size 004 unit at 8 l/min water flow rate with 19kPa pressure drop.

     Capacity at medium or low fan speed may be calculated by using Multiplier vs Speed table shown below cooling capacities talbe.

- **Selection at medium fan seen (cooling)**

  A common pracitce is to operate fans most of the time at medium or low speed. Units, therefore, may be selected on the basis of an average cooling load condition and at medium speed. Operation at high fan speed allows for unusual or peak load requirements.

  1. **Determine job requirements**

     Given: Average design room sensible heat cooling load ··· 1477w Average design room total heat cooling load ···1977w
     Entering air temperature·····27°Cdb,19.5°Cwb Entering water temperature·····7°C
     Average design Air Quantity····· 340m³/h

  2. **Select trial unit size**

     Enter Physical Data table at "M"(medium) speed air quantity. Road 350m³/h which is the closest air quantity to that required in this example. Read up to select a size 003 trial unit size.

  3. **Determine medium fan speed cooling capacity Correction Factors for trial unit size, using Cooling Capacity Correction Factors table**

     For a size 003 unit, the sensible heat multiplier is 0.84, total heat multiplier is 0.86.

  4. **Determine adjusted sensible and total heat cooling loads by dividing average design loads by the selected multiplier.**

     $$\frac{1477}{0.84} = 1762w \text{ (adjusted sensible load)} \qquad \frac{1977}{0.86} = 2302w \text{ (adjusted total load)}$$

  5. **Make final unit selection. Determine water flow rate and pressure drop**

     Substituting adjusted loads for specified load, enter Cooling Capacities table at 27°C db, 19.5°C wb, and 7°C ewt. Find sensible and total heat cooling capacities equal to or greater than adjusted loads. Read 1944w sensilbe and 2517w total heat cooling capacities. Read left to select a size 003 unit at 6 l/min water flow with 9kPa pressure drop.

- **Heat (with unit selected for cooling)**

  Unit coil selected for cooling normally provides adequate heating capacity. Heating selection, therefore, normally consists of selecting entering water temperature required to satisfy room heating load at the water flow rate used for cooling.

  1. **Determine job requirements**

     Given: Unit selected for cooling·····Size 004 at 14l/min
     Room heat cooling load····· 5820w Entering air temperature·····21°Cdb

  2. **Determine water temperature requirements**

     Enter Hot Water Heating Capacities table, A size 004 unit at 8 l/min provides 5844w, or heating when operating with 60°C entering water at high fan speed.

DIMENSIONS

Fan Coil Unit

TYPE	DIMENSION										
	A	B	C	D	E	F	H		K	M	N
002	690	770	550	520	35	480	550	72	400	10	6
003	770	890	630	600	75	480	630	12	400	12	
004	890	970	750	720	75	600	750	72	600	14	6
005	970	1090	830	800	75	720	830	112	600	16	8
006	1090	1410	950	920	55	840	950	72	800	18	8
008	1410	1530	1270	1240	95	1080	1270	32	1200	26	10
010	1530	1770	1390	1360	95	1200	1390	92	1200	28	10
012	1770	2010	1630	1600	95	1440	1630	112	1400	32	12
014	2010	2250	1870	1840	95	1680	1870	132	1600	36	14

Note: B is the dimension of lengthen drain pan

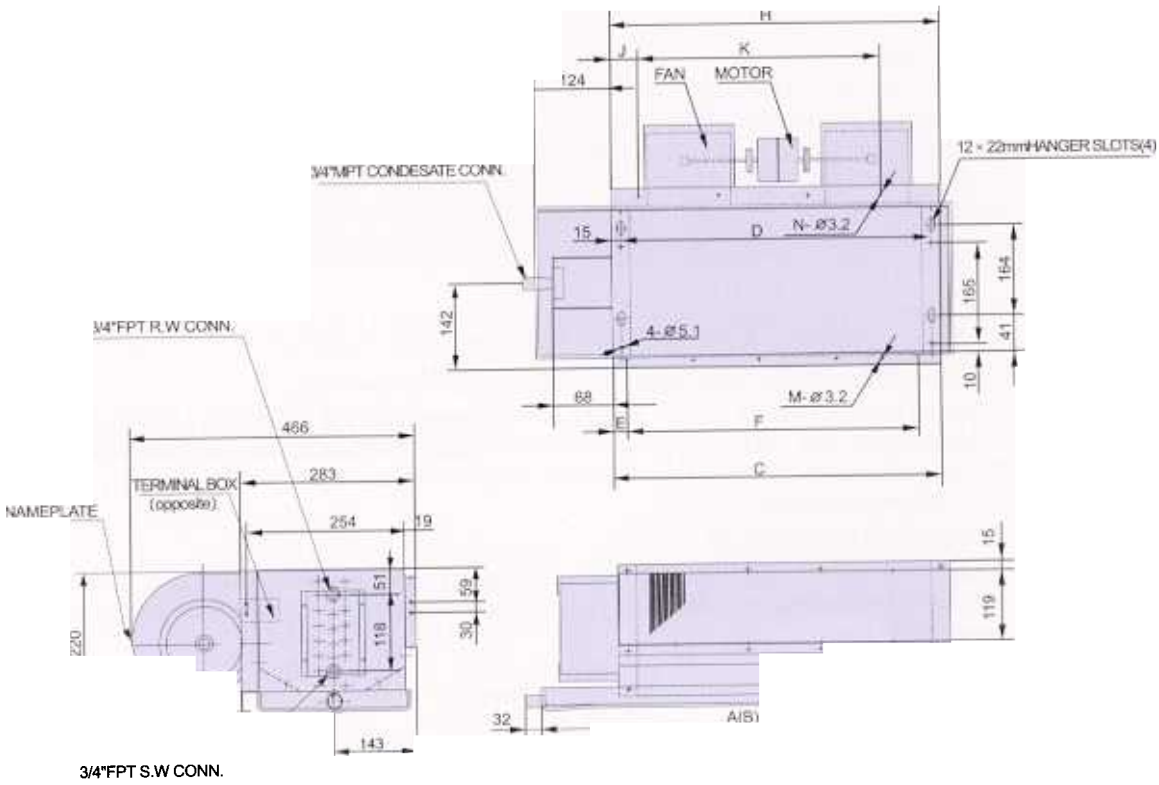

DIMENSIONS

Fan Coil Unit

TYPE	DIMENSION										
	A	B	C	D	E	F	H	J	K	M	N
002	690	770	550	520	35	480	550	72	400	10	6
003	770	890	630	600	75	480	630	112	400	12	6
004	890	970	750	720	75	600	750	72	600	14	6
005	970	1090	830	800	75	720	830	112	600	16	8
006	1090	1410	950	920	55	840	950	72	800	18	8
008	1410	1530	1270	1240	95	1080	1270	32	1200	26	10
010	1530	1770	1390	1360	95	1200	1390	92	1200	28	10
012	1170	2010	1630	1600	95	1440	1630	112	1400	32	12
014	2010	2250	1870	1840	95	1680	1870	132	1600	36	14

Note: B is the dimension of lengthen drain pan

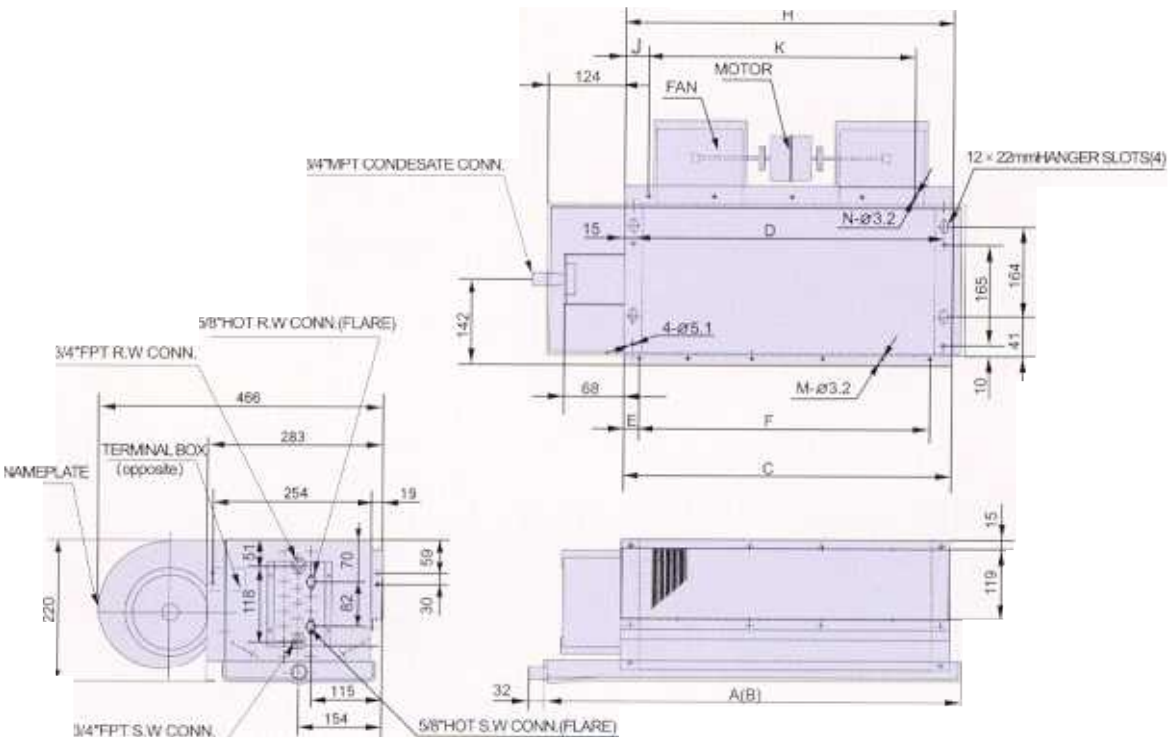

DIMENSIONS

Accessory-Return Air Plenum

PART NO.	DIMENSION						
	A	B	C	D	E	F	USED IN
42CE402900	554	47	2	400	524	520	42CE002
42CE403900	634	87	2	400	604	600	42CE003
42CE404900	754	47	3	400	724	720	42CE004
42CE405900	834	102	3	600	804	800	42CE005
42CE406900	954	47	4	800	924	920	42CE006
42CE408900	1274	107	5	1000	1244	1240	42CE008
42CE410900	1394	67	6	1200	1364	1360	42CE010
42CE412900	1634	87	7	1400	1604	1600	42CE012
42CE414900	1874	107	8	1600	1844	1840	42CE014

Note: 1. Return air plenum avaliable with bottom or rear return air.
2. Panel can be field reversed for either rear or bottom.
3. Filter should be installed in return air tube.

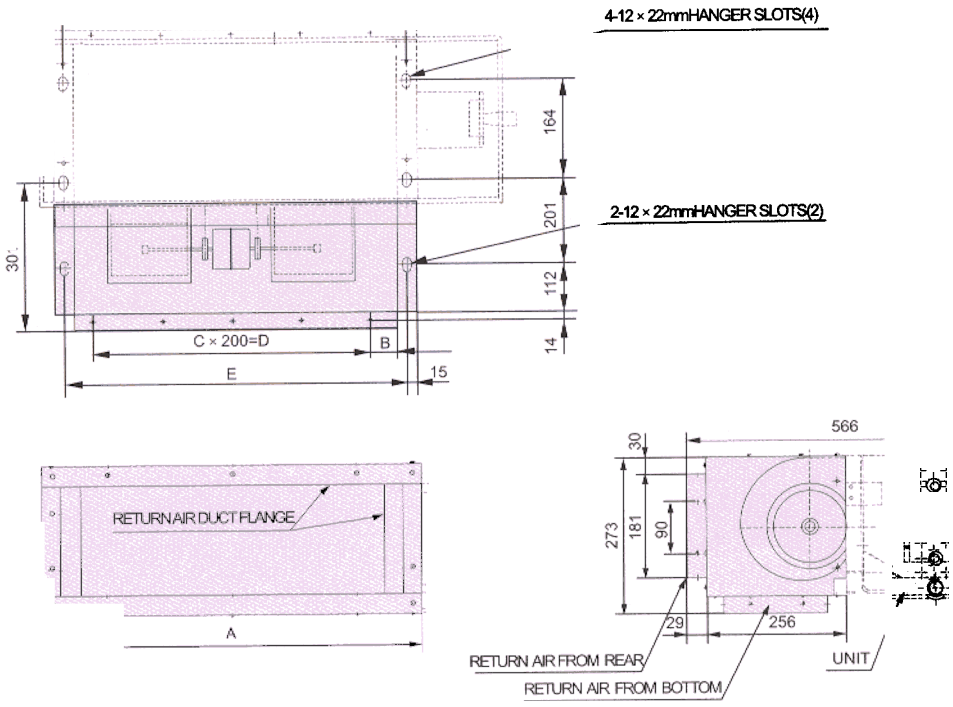

FAN PERFORMANCE

2/(2+1)Standard Unit

42CE002200~014200/42CE002210~014210

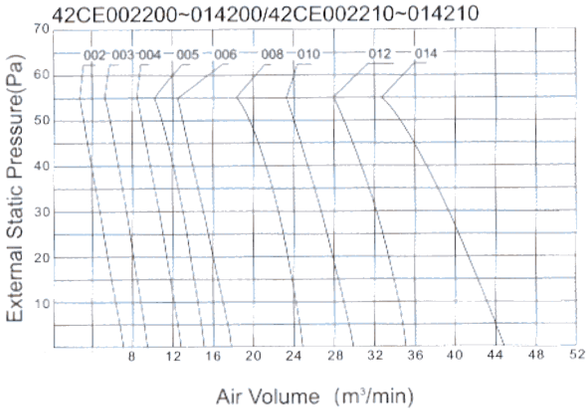

3/(3+1)Standard Unit

42CE002300~014300/42CE002310~014310

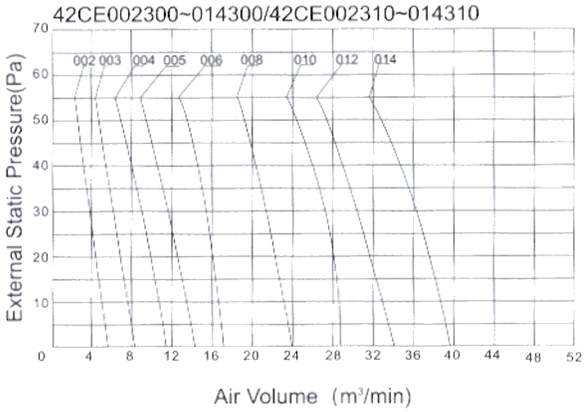

2/(2+1)With Static Pressure Unit

42CE002203~014203/42CE002213~014213

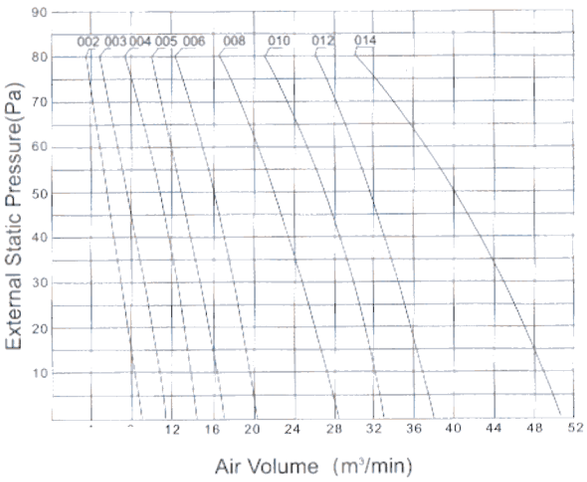

3/(3+1)With Static Pressure Unit

42CE002303~014303/42CE002313~014313

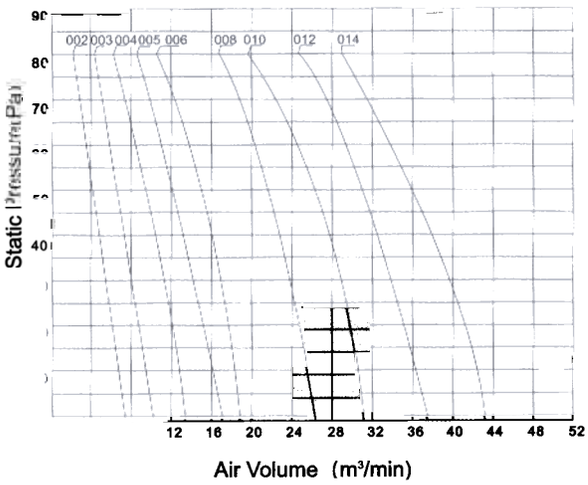

2/(2+1)High Static Pressure Unit

42CE002205~014205/42CE002215~014215

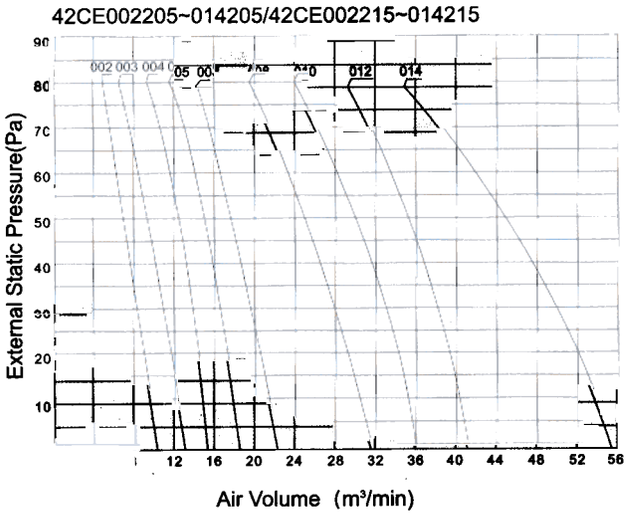

3/(3+1)High Static Pressure Unit

42CE002305~014305/42CE002315~014315

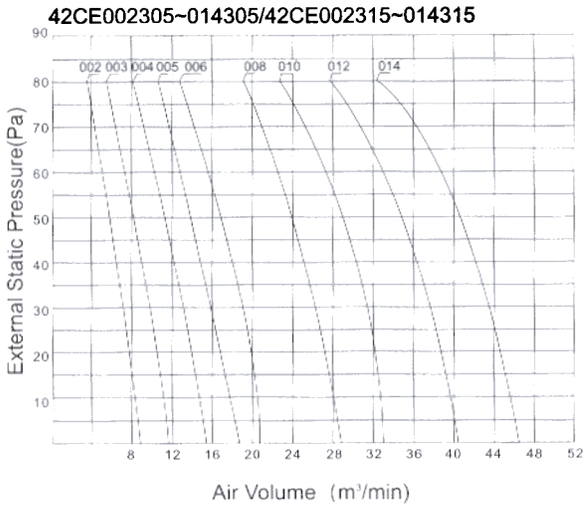

WIRING DIAGRAM

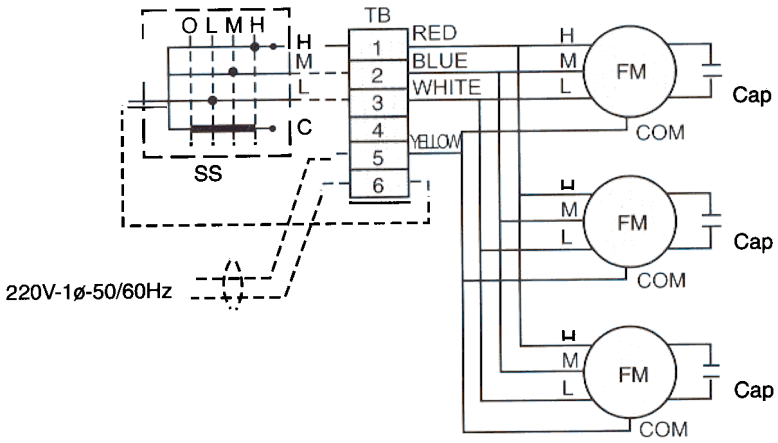

Cap Capa Citor
FM Fan Motor
SS Switch
TB Terminal Block
—— Factory Wiring
--- Field Wiring
One motor use in unit002,003,004,005,006
Two motor use in unit008,010,012
Three motors use in unit014

Electric Data

Power: 220V~1Ph~50Hz

	TYPE	002	003	004	005	006	008	010	012	014
Power Input (W)	2row 0Pa	26	30	52	75	85	125	160	190	250
	2row 30Pa	40	50	72	95	115	140	190	225	290
	2row 50Pa	50	65	88	115	128	200	225	248	336
	3row 0Pa	25	28	51	62	82	120	150	180	198
	3row 30Pa	41	52	65	96	116	130	180	215	280
	3row 50Pa	48	63	85	110	122	190	212	236	322
Current (A)	2row 0Pa	0.12	0.14	0.24	0.34	0.39	0.57	0.73	0.86	1.14
	2row 30Pa	0.18	0.23	0.33	0.43	0.52	0.64	0.86	0.98	1.32
	2row 50Pa	0.23	0.30	0.40	0.52	0.58	0.91	1.02	1.13	1.53
	3row 0Pa	0.11	0.13	0.23	0.28	0.37	0.55	0.68	0.82	0.90
	3row 30Pa	0.19	0.24	0.30	0.44	0.53	0.59	0.82	0.98	1.27
	3row 50Pa	0.22	0.29	0.39	0.50	0.55	0.86	0.96	1.07	1.46
Motor Power Output (W)	2row 0Pa	8	10	16	28	40	25×2	35×2	40×2	35×3
	2row 30Pa	12	16	28	45	55	30×2	45×2	55×2	55×3
	2row 50Pa	25	30	45	70	90	60×2	70×2	90×2	90×3
	3row 0Pa	8	10	16	28	40	25×2	35×2	40×2	28×3
	3row 30Pa	12	16	28	45	55	30×2	45×2	55×2	55×3
	3row 50Pa	25	30	45	70	90	60×2	70×2	90×2	90×3

Note: 4piping coil 2+1 row is the same as 2 row
4piping coil 3+1 row is the same as 3 row

1.Application

This unit uses 50Hz/220v AC supply with the environment temperature between -30°C~+65°C and not higher than 4000m above sea level.

2.Installation

Keep the top panel of horizontal unit horizon, and adjust the bolt of vertical unit horizon. When installing the furred-in unit, set aside the maintenance outlet, and protect the cover to prevent the dust if the building is still constructed.

3.Piping Connections

When installing the water-in and water-out pipes, clamp the end of the pipe with forceps. The valves must be installed on the pipes. The deflating valve must be installed on the top of the pipeline and the water drain valve on the bottom.
The condensate pipe must be installed sloping to assure draining the condensate water favoringly.
All the water-in and water-out pipes must be heat preserved including the valves and condensate plate in the unit.

4.Wiring Connections

Comply strictly with the connecting diagram on the unit. NOTE: The middle line must be connected with the yellow line on the diagram. The grounding bolt must be installed in the wiring box to connect with the grounding system when installing.

5.Water Supply Request

DO NOT supply the steam and the hot water above 100°C. The temperature of supply water cannot exceed 65°C for the 2-piping unit. If the temperature exceed 65°C, the demineralized water must be used. Otherwise, the water will rust the pipe and affect of heat transform.

6.Freeze Resistance

If the temperature outside is lower than 0°C, stopping operating the recycle pump will freeze the water in the pipe, the coil and piping will be frost crack. So the measure following must be taken:

1)Operate the recycle pump non-stop.
2)An anti-freeze agent should be added to the coil.

7.Maintenance

Open the deflating valve before start up the unit to evacuate the air in the pipe until the water drain. Clear the air filter every month. Clear the coil regularly if needed to assure the effect of heat transform.

Carrier Air Conditioning Sales & Service (shanghai) Co.,Ltd.

www.carrier.com.cn

Product Manufacturer:
Shanghai Tonghui-Carrier Air Conditioning Equipment Co., Ltd.
Add:Nanqiao Town,Fengxian County,Shanghai 201400 china
Tel:86-21-57420683
Fax:86-21-54720685

We will make renovation continuously to make the products better fit the clients.
We reserve the right to change the data without notice.

A-42CE-0403-1E

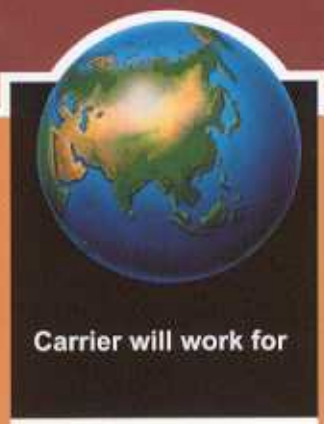

Carrier will work for

a comfortable and beautiful world ·····

Carrier

Be the leader of the world HVAC&R,Carrier always apply ourselves to provide much more comfortable living quality to customers.

And we have much higher goal:

The six specific areas on product and system development identified by Carrier, express Carrier's understanding for the future HVAC&R.

When you use product and system of Carrier, there contains our faith:

Work for a comfortable and beautiful world!